Comments and questions regarding this section may be directed to the person listed below:

Shawn Nelson, ESH&A
G40 TASF
294-2153

NOTE: This Section's Sign-Off Record is maintained in the ESH&A Office, G40 TASF.

TABLE OF CONTENTS

SECTION 5 – INDUSTRIAL/GENERAL SAFETY PROGRAMS

Revision Review ..... *vii*
Signature Page ..... *viii*

5.1 General Safety 1
- 5.1.1 References
- 5.1.2 Background
- 5.1.3 Program Information
  - 5.1.3.1 Failure to Follow ESH&A Procedures
  - 5.1.3.2 General Safety Rules
  - 5.1.3.3 Operations Rules
  - 5.1.3.4 Fire Prevention Rules
  - 5.1.3.5 General Electrical Safety Rules
  - 5.1.3.6 Storage Safety Rules
- 5.1.4 Training
- 5.1.5 Performance Checklists

5.2 Stop Work Authority 6

5.3 Means of Egress and Walking & Working Surfaces 8
- 5.3.1 References
- 5.3.2 Backgrounds
- 5.3.3 Program Information
  - 5.3.3.1 Rules Applying to Housekeeping
  - 5.3.3.2 Rules Applying to Aisles and Passageways
  - 5.3.3.3 Requirements for Floor Loading Protection
  - 5.3.3.4 Requirements for Safe Means of Egress from Fire and Like Emergencies
- 5.3.4 Training
- 5.3.5 Performance Checklists

5.4 Vehicle Mounted Elevating & Rotating Work Platforms 11
5.4.1 References
5.4.2 Background
5.4.3 Program Information
5.4.4 Training
5.4.5 Performance Checklists

5.5 Powered Industrial Vehicles 14
5.5.1 References
5.5.2 Background
5.5.3 Program Information
5.5.3.1 General Safety Requirements
5.5.3.2 Operation Rules for Powered Industrial Vehicles
5.5.3.3 Traffic Regulations for Powered Industrial Vehicles
5.5.3.4 Personal Protective Equipment (PPE) Requirements
5.5.4 Training
5.5.5 Performance Checklists
Appendix A: Ames Laboratory Forklift Inspection Checklist

5.6 Personal Protective Equipment (PPE) 20
5.6.1 References
5.6.2 Background
5.6.3 Program Information
5.6.3.1 Eye Protection Requirements
5.6.3.2 Head Protection Requirements
5.6.3.3 Foot Protection Requirements
5.6.3.4 Hand and Arm Protection Requirements
5.6.4 Training
5.6.5 Performance Checklists

5.7 Machine Guarding 25
5.7.1 References
5.7.2 Background
5.7.3 Program Information
5.7.3.1 Requirements for All Machinery and Equipment
5.7.3.2 Machines Controls and Equipment
5.7.3.3 Inspection and Maintenance of Machinery
5.7.3.4 Requirements for Table Saws
5.7.3.5 Requirements for Radial Arm Saws
5.7.3.6 Guarding Requirements for Band Saws
5.7.3.7 Requirements for Drill Presses
5.7.3.8 Requirements for Guarding Abrasive Wheels
5.7.3.9 Requirements for Portable Abrasive Wheels

5.7.3.10 Requirements for Metal Cut Off Saws
5.7.3.11 Requirements for Vertical Milling Machines
5.7.3.12 Requirements for Lathes
5.7.3.13 Requirements for Surface Grinders
5.7.3.14 Ames Laboratory Fabricated Equipment
5.7.4 Training
5.7.5 Performance Checklists
Appendices A1 – A9: Saw and Machine Guarding

5.8 Hand and Portable Power Tools 39
5.8.1 References
5.8.2 Background
5.8.3 Program Information
5.8.3.1 General Requirements
5.8.3.2 Knives or Edged Tools
5.8.3.3 Miscellaneous Hand Tools
5.8.3.4 Guards
5.8.4 Training
5.8.5 Performance Checklists

5.9 Compressed Air 43
5.9.1 References
5.9.2 Background
5.9.3 Program Information
5.9.3.1 Compressed Air Receiver Rules
5.9.3.2 Air Compressor Receiver Hose & Attachment Maintenance
5.9.3.3 Cleaning with Compressed Air
5.9.4 Training
5.9.5 Performance Checklists

5.10 Welding, Cutting and Brazing Program.....46
5.10.1 References
5.10.2 Background
5.10.3 Program Information
5.10.3.1 Fire Prevention and Protection for Welding, Cutting & Brazing
5.10.3.2 Requirements for Oxygen and Fuel Gases
5.10.3.3 General Storage of Cylinders
5.10.3.4 Requirements for Operating Procedures
5.10.4 Training
5.10.5 Performance Checklists

5.11 Electrical Safety & Electrical Related Work Practices.....52
5.11.1 References
5.11.2 Background

5.11.3 Program Information
5.11.3.1 Definitions
5.11.3.2 General Electrical Safety Requirements
5.11.3.3 Personal Protective Equipment (PPE)
5.11.3.4 Working On or Near Exposed De-Energized Parts
5.11.3.5 Working On or Near Energized Parts
5.11.4 Training
5.11.5 Performance Checklists

5.12 Lockout Tagout Program 59
5.12.1 References
5.12.2 Background
5.12.3 Program Information
5.12.3.1 Definitions
5.12.3.2 Applications Requiring Lockout/Tagout
5.12.3.3 Lockout/Tagout Procedure
5.12.3.4 Reactivation of Energy Source
5.12.3.5 Shift and/or Personnel Changes
5.12.3.6 Testing of Machinery, Equipment and/or Trouble-Shooting
5.12.3.7 Working on Energized Equipment
5.12.4 Training
5.12.5 Performance Checklists
Appendix A – Authorized Employee LOTO Annual Certification

5.13 Scaffolding and Fall Protection 68
5.13.1 References
5.13.2 Background
5.13.3 Program Information
5.13.3.1 Definitions
5.13.3.2 Material Requirements Used to Erect Scaffolding
5.13.3.3 General Employee Safety Rules
5.13.3.4 Safety Rules for Tubular Welded Frame Scaffolds
5.13.3.5 Safety Rules for Manually Propelled Mobile Scaffolds
5.13.4 Training
5.13.5 Performance Checklists
Appendix A – Tubular Frame Scaffolding Components

5.14 Eye Washes and Safety Showers 75
5.14.1 References
5.14.2 Background
5.14.3 Program Information
5.14.3.1 Eye Washes and Safety Showers
5.14.3.2 Portable (non-plumbed) Eyewashes
5.14.4 Training
5.14.5 Performance Checklists

5.15 Ladder Safety Program 78
5.15.1 References
5.15.2 Background
5.15.3 Program Information
5.15.3.1 General Equipment Requirements
5.15.3.2 Use Requirements
5.15.3.3 Inspection & Maintenance Requirements
5.15.4 Training
5.15.5 Performance Checklists

5.16 Hoisting and Rigging Program 83
5.16.1 References
5.16.2 Background
5.16.3 Program Information
5.16.3.1 Definitions
5.16.3.2 Requirements for Overhead and Gantry Cranes
5.16.3.3 Requirements for Stops, Bumper Rail Sweeps and Guards
5.16.3.4 Requirements for Sheaves
5.16.3.5 Requirements for Ropes (Wire Rope, Synthetic Rope, etc)
5.16.3.6 Requirements for Slings
5.16.3.7 Requirements for Chains
5.16.3.8 Requirements for Brakes (Holding Brakes)
5.16.3.9 Suspect / Counterfeit Items
5.16.3.10 Requirements for Inspections
5.16.3.11 Requirements for Testing
5.16.3.12 Precautionary Measures for Preventive Maintenance
5.16.3.13 Requirements for Attaching, Handling, and Moving a Load
5.16.4 Training
5.16.5 Performance Checklists
Appendix A – Hoisting & Rigging Inspection Checklist

5.17 Working Alone....95
5.17.1 References
5.17.2 Background
5.17.3 Program Information
5.17.3.1 Rules Applying to Working Alone
5.17.3.2 Exemptions
5.17.4 Training
5.17.5 Performance Checklists

5.18 Confined Space Entry Program 99
5.18.1 References
5.18.2 Background
5.18.3 Program Information
5.18.3.1 General Safety Rules
5.18.3.2 Equipment Requirements
5.18.3.3 Site Preparation Procedure
5.18.3.4 Elements of a Confined Space Permit

5.18.3.5 Procedure for Entry into Permit Required Confined Spaces
5.18.3.6 Procedure for Rescue from Permit Required Confined Spaces
5.18.4 Training
5.18.5 Performance Checklists
Appendix A: Ames Laboratory External Confined Spaces
Appendix B: Ames Laboratory Confined Spaces
Appendix C: Ames Laboratory Confined Space Entry Permit
Appendix D: Pre-Entry Checklist for Non-Permit Required Confined Spaces
Appendix E: Confined space Entry Procedures – Training Statement

5.19 Fall Protection (Elevated Work – Platforms and Roof Work).....115
5.19.1 References
5.19.2 Background
5.19.3 Program Information
5.19.3.1 Definitions
5.19.3.2 Fall Protection Requirements
5.19.3.3 Guardrail System Requirements
5.19.3.4 Personal Fall Arresting System Requirements
5.19.3.5 Warning Line System Requirements
5.19.3.6 Safety Monitoring Systems
5.19.3.7 Hoisting Areas
5.19.3.8 Covers
5.19.3.9 Written Fall Protection Plan
5.19.3.10 Inspections
5.19.4 Training
5.19.5 Performance Checklists

5.20 Excavating and Trenching Program 126
5.20.1 References
5.20.2 Background
5.20.3 Program Information
5.20.3.1 General Excavation Program Requirements
5.20.3.2 Atmospheric Testing Requirements
5.20.3.3 Protective Requirements from Hazards by Water Accumulations
5.20.3.4 Inspection Requirements
5.20.3.5 Criteria for Sloping and/or Benching Systems
5.20.3.6 Criteria for Shoring Protective Systems
5.20.3.7 Criteria for Timber Shoring
5.20.4 Training
5.20.5 Performance Checklists
Appendix A: Slope Configurations
Appendix B: Timber Spacing and Installation Requirements
Appendix C: OSHA Guidelines for Combination Shoring and Sloping Configurations
Appendix D: Schematic or Trench Jacks and Trench Shields
Appendix E: Authorized Entrants, Attendants and Supervisors

REVISION / REVIEW LOG

SECTION 5 – INDUSTRIAL/GENERAL SAFETY PROGRAMS

Review Number:	Effective Date:	Contact Person:	Pages Affected:	Description of Revision:
0	10/11/1999	Shawn Nelson	All	Original Issue
1	1/13/06	Shawn Nelson	See Revision Description	G:\Doc&Recs\DCP\Revision Description\Manual 10200.002 Section 5 Revision 1.doc

SIGN-OFF RECORD

The Environment, Safety Health and Assurance Program Manual has been reviewed and approved as documented below:

Reviewed by: _____ Date: _____
Environment, Safety, Health & Assurance

Approved by: _____ Date: _____
Division Director, Chief Operations Officer

Approved by: _____ Date: _____
Division Director, Science and Technology

Approved by: _____ Date: _____
Deputy Director

Approved by: _____ Date: _____
Director

Note: Original Sign-off Record with signatures is on file with ESH&A.

5.0 INDUSTRIAL SAFETY PROGRAM

5.1 GENERAL SAFETY

Applicability Statement: *This section applies to all employees and contractors.*

5.1.1 REFERENCES

OSHA 1910.1 Purpose and Scope General Industry
OSHA 1926.1 Purpose and Scope Construction Industry
Manual 10200.003 Waste Management Program Manual
Manual 46200.001 Electrical Safety Manual

5.1.2 BACKGROUND

Williams-Steiger Act of 1970, Section 5(a)

Each Employer shall:

- Furnish each of his employees employment and a place of employment which is free from recognized risks that are causing or are likely to cause death or serious physical harm to his employees;
- Comply with occupational safety and health standards promulgated under this Act.

Each Employee shall:

- Comply with occupational safety and health standards and all rules, regulations and orders issued pursuant to the Williams Steiger Act which are applicable.

5.1.3 PROGRAM INFORMATION

5.1.3.1 Failure to follow ESH&A Policies, Procedures and Programs

- Flagrant or willful disregard or repeated failure to follow safety rules or other acts which endanger people or property may normally result in progressive discipline.

5.1.3.2 General Safety Rules

The following are the general safety rules for all employees of Ames Laboratory:

- Employees have the right to refuse any job where adequate safety precautions have not been met. Employees must contact their immediate Supervisor/Group Leader/Manager to agree upon proper safety precautions. If employees and Supervisor/Group Leader/Manager do not agree, ESH&A must be contacted immediately.

NOTE: See Section 5.2, "Stop Work Authority", of this manual for further information and guidance.

- Report unsafe conditions or activities (NEAR-HITS) to the Supervisor, Group Leader, Manager or ESH&A.
- Perform work safely and correctly.
- Submit safety suggestions for the promotion of safety and the prevention of accidents using the Accidents, Incidents & Employee Safety Concerns: Classification & Investigation (Procedure #10200.038).
- Understand, perform and comply with all written safety programs, procedures and requirements.
- If unsure on how to perform a task or job correctly and safely, ask a more experienced co-worker, Supervisor, Group Leader, Manager, or refer to group specific SOP's.
- Practical jokes and horseplay lead to accidents and are strictly prohibited.
- Report all accidents, injuries or illnesses, no matter how minor, to your Supervisor/Group Leader/Manager or Occupational Medicine or ESH&A.
- Do not lift or push an object if it is too heavy. Ask for assistance.
- Keep work areas, clean and orderly. Return items to their proper place after use.
- Keep aisles, eyewashes, fire extinguishers, first aid kits and work places uncluttered, clear and unobstructed. Pick up debris on the floor immediately.
- Discard hazardous waste according to the Ames Laboratory Waste Management Program Manual (Manual #46400.001).
- Clean spilled oil or any liquid on the floor immediately.
- Remove or secure loose fitting or torn clothing, ties, jewelry (rings, watches, bracelets, necklaces, chains, etc.) before working around machine parts. These can lead to accidents by getting caught in moving parts. Also, clothing which is too tight can restrict movement and can be hazardous.
- Do not run.
- Follow all traffic ordinances of the university, city and state in which you are driving.

5.1.3.3 Operations Rules

The following are the operational safety rules:

- Replace or repair defective tools such as:
  - Hammers with cracked handles
  - Unstable ladders
  - Mushroomed chisel heads

- Examine all equipment for safe operation before work is started. Operate all equipment with safeguards in place.

- Never use compressed air to clean clothing, your body, fellow employees or equipment.

- Know how to operate machinery before starting the job. Do not proceed until training and full understanding are attained.

- Before cleaning, repairing or adjusting machinery, disconnect and verify that power is locked out and tagged out. (Lockout/tagout training is required—see Section 5.12 of this manual for the Lockout/Tagout Program.)

- When removing chips from machines, do not use fingers to pickup chips or hand to brush chips. Use brush, gloves, towel, etc.

- Do not use tools for purposes other than intended by design.

- Do not ride on cranes or lift trucks as a passenger.

5.1.3.4 Fire Prevention Rules

The following are the general Fire Prevention Safety Rules (see Section 8 for complete Fire Protection information):

- Ames Laboratory is a smoke-free facility and smoking is not permitted anywhere in the buildings, near air-handling intakes or at building main entrances (smoking area's have been designated).

- Maintain combustibles/flammables in a flammable storage cabinet or room.

- Know where emergency exits are located in the event of an emergency and maintain traffic paths which are clear and unobstructed.

- Know where the fire alarms and fire extinguishers are located.

- Call 911 in the event of a medical emergency.

- Call 4-5511 in the event of a chemical spill.

- Activate the Fire Alarm Pull Station or call 911 in the event of a fire emergency

5.1.3.5 General Electrical Safety Rules

The complete electrical safety rules are contained in the Ames Laboratory Electrical Safety Manual. The following are general electrical safety rules:

- No Live (energized) work over 50 volts is permitted unless written approval is granted by either the Chief Operations Officer or the Director for Science and Technology.

- Before using any electrical equipment, ensure that hands are dry and you are not standing in water.

- All electrical tools must be grounded or double insulated.

- Inspect/examine all electrical equipment, including extension cords every time used. Take out of service and tag any damaged equipment and have it repaired or replaced. Equipment must be inspected for:
  - Frayed, torn or split cords;
  - Strain relief (outer insulating jacket of cord has pulled from male/female attachment);
  - Cracked or broken insulation;
  - Missing ground prong, etc.

- Take electrical equipment out of service and tag if you detect any of the following danger signals:
  - Sparks or smoke;
  - Unusual heat or odors;
  - Shock or tingle while using the tool.

- Do not remove guards and do not use equipment which is missing guards. If a guard is missing, immediately notify the Supervisor, Group Leader, Manager or ESH&A.

5.1.3.6 Storage Safety Rules

- Overhead storage on top of office, laboratory or shop cabinets, bookcases or other flat surfaces, which are over 6 feet above a floor surface, is not permitted. This policy does not apply to areas designed to permit high rack storage such as a warehouse.

- Storage on top of cabinets, shelves or bookcases below 6 feet from a floor surface is permitted. However, it should be stable a secure. It should not compromise the physical integrity of the shelf, bookcase or cabinet on which it is stored.

- Employees observing overhead storage that does not meet the requirements of this policy should correct the storage problem or report it to their direct supervisor or ESH&A. Exception to this policy will be considered by ESH&A on a case-by-case basis.

5.1.4 TRAINING

Detailed programmatic information is provided via the following institutional training modules:

GENERAL EMPLOYEE TRAINING (GET) FOR NEW EMPLOYEES #AL-001	
Intended Audience:	*Mandatory for all new employees*
Module Format:	*Classroom Instruction, reviews administrative policies, General Safety, Emergencies, Industrial Hygiene Program, Environmental Protection Program, and Radiation Safety.* *Estimated Completion time: 1.5 hours.*
Associated Retrain Period & Format:	*Retrain is required if an employee has been terminated from the Laboratory for more than a one-year period. All Ames Laboratory employees receive the Laboratory's Annual Retrain Mailing, which covers, Fire Safety, Cyber Security, Physical Security, informational updates and policy reminders.*

Group / activity-specific training shall be given to each employee prior to work that includes a discussion of physical hazards, chemical hazards, hazard mitigation, location of MSDS's, procedural information, emergency response measures and other safety information. This training shall be documented by the Supervisor, Group Leader or Department Manager.

5.1.5 PERFORMANCE CHECKLISTS

Supervisors / Group Leader / Department Manager shall;

- ❑ Assure workers have training and competence commensurate with work responsibilities.
- ❑ Enforce the ESH&A procedures in this manual.
- ❑ Communicate and explain the need for compliance with all ESH&A Programs.

Employees shall:

- ❑ All employees are expected to observe and follow the established procedures in this Environment, Safety, Health and Assurance Program Manual (Manual10200.002).
- ❑ Bring all unsafe acts, practices, or conditions to their Supervisors, / Group Leaders / Department Managers attention.
- ❑ Inform Supervisor/Group Leader/Manager or ESH&A if unable to get an unsafe situation corrected.

Environment, Safety, Health and Assurance shall:

- ❑ Conduct training as necessary for understanding of these procedures.
- ❑ Periodically review and update regulations applicable to Ames Laboratory.
- ❑ Provide support for and help in enforcing the Environment, Safety, Health and Assurance procedures.

5.2 STOP WORK AUTHORITY

Applicability Statement: *This section applies to all employees and contractors.*

5.2.1 REFERENCES

Procedure 10200.010 Readiness Review
Williams-Steiger Act of 1970, Section 5(a)

5.2.2 BACKGROUND

The purpose of the Stop Work Authority Policy is to provide Ames Laboratory employees with a process to prevent serious injury, impairment of health, or adverse impact to the environment. Included in this policy is a process to start up operations that have been shut down (Readiness Review Procedure 10200.010). The concept of having Stop Work Authorization for Ames Laboratory employees is recognized as a good management practice.

Definition:

Stop Work:
Immediate action taken by any Ames Laboratory employee, Supervisor, Group Leader, Department Manager, Program Director, Division Director, Deputy Director, Director or Environment, Safety, Health and Assurance Personnel to stop work when there is the apprehension of a serious injury, impairment of health or adverse impact to the environment. This immediate action would result from a condition or practice in the work place as judged by a reasonable and knowledgeable employee.

5.2.3 Stop Work Authority Policy (10200.005)

All Ames Laboratory employees have authority to stop work to prevent serious injury, impairment of health or adverse impact to the environment. The responsibilities listed in Section 5.2.5 ensure the safety of the individual initiating the stop work, the safety of the individual(s) performing the activity, and safeguarding the research or work that is in process.

A Readiness Review (Procedure 10200.010) shall be completed as a prerequisite to the start-up of operations resulting from Stop Work actions.

5.2.4 TRAINING

Detailed programmatic information is provided via the following institutional training modules:

GENERAL EMPLOYEE TRAINING (GET)	**#AL-001**
Intended Audience:	*Mandatory for all employees*
Module Format:	Stop Work Authority *is incorporated into General Employee Training (GET) which is classroom instruction. Estimated completion time: 1.5 hours.*
Associated Retrain Period & Format:	*Retrain is required if an employee has been terminated from the Laboratory for more than a one-year period. All Ames Laboratory employees receive the Laboratory's Annual Retrain Mailing, which covers, Fire Safety, Cyber Security, Physical Security, informational updates and policy reminders.*

Group / activity-specific training shall be given to each employee prior to work that includes a discussion of physical hazards, chemical hazards, hazard mitigation, location of MSDSs, emergency response measures, procedural information and other safety information,. This training shall be documented by the Group Leader / Department Manager.

5.2.5 PERFORMANCE CHECKLISTS

Supervisors / Group Leaders / Department Managers shall:

- ❑ Stop Work in all the areas for which they have been assigned responsibility.
- ❑ Ensure employees and contractors performing work at the facility adhere to the Stop Work Program.

Employees shall:

- ❑ Stop Work through their Supervisor / Group Leader / Department Manager for activities in their immediate work area.

Environment, Safety, Health and Assurance Personnel, Division Directors, Deputy Director, and Laboratory Director shall:

- ❑ Stop Work Authority for all Ames Laboratory activities and all activities performed in Ames Laboratory or rented space.

5.3 MEANS OF EGRESS AND WALKING & WORKING SURFACES

Applicability Statement: *This section applies to all employees, visitors, and contractors.*

5.3.1 REFERENCES

NFPA 101 Life Safety Code
OSHA 1910.21 Walking & Working Surfaces Definitions
OSHA 1910.22 Walking & Working Surfaces General Requirements
OSHA 1910.23 Guarding Floor & Wall Openings
OSHA 1910.35 Means of Egress Definitions
OSHA 1910.36 Means of Egress General Requirements
OSHA 1910.37 Means of Egress

5.3.2 BACKGROUND

Every building or structure shall be so constructed, arranged, equipped, maintained, and operated as to avoid undue danger to the lives and safety of its occupants during normal operations and in the event of fire, smoke, fumes, resulting panic or other emergency.

5.3.3 PROGRAM INFORMATION

Ames Laboratory follows the requirements outlined by NFPA 101 Life Safety Code and OSHA General Industry Standards. This program sets forth standards to ensure safe walking and working surfaces and means of egress.

5.3.3.1 Rules Applying to Housekeeping

- All places of employment, passageways, storerooms, and service rooms shall be maintained in a clean, orderly and sanitary condition.

- The floor of every workroom shall be maintained in a clean and, so far as possible, a dry condition. Where wet processes are used, drainage shall be maintained and false floors, platforms, mats, or other dry standing places should be provided where practicable.

- Every floor, work area, and passageway shall be maintained free from protruding nails, splinters, holes, or loose boards.

5.3.3.2 Rules Applying to Aisles and Passageways

- The minimum width of any aisle leading to a main passageway or hallway shall not be less than 28 inches.

- Where mechanical handling equipment is used, sufficient safe clearances shall be allowed for aisles, at loading docks, through doorways and wherever turns or passage must be made. Aisles and passageways shall be maintained clear and in good repair, with no obstruction across or in aisles that could create a hazard.

5.3.3.3 Requirements for Floor Loading Protection

- In every building or other structure (mezzanines), the loads approved by the building official shall be posted and securely affixed.

5.3.3.4 Requirements for Safe Means of Egress from Fire and Like Emergencies

- The minimum width of any passageway or exit access shall not be less than 36 inches.
- Every building or structure shall be so constructed, arranged, equipped, maintained, and operated as to avoid undue danger to the lives and safety of its occupants from fire, smoke, fumes, or resulting panic during escape from the building or structure in case of fire or other emergency.
- In every building or structure exits shall be so arranged and maintained as to provide free and unobstructed egress from all parts of the building or structure at all times when it is occupied.
- Every exit shall be clearly visible or the route to reach it shall be conspicuously indicated in such a manner that every occupant of every building or structure will readily know the direction of escape from any point, and each path of escape, in its entirety.
- Any doorway or passageway not constituting an exit or way to reach an exit, but of such a character as to be subject to being mistaken for an exit, shall be so arranged or marked as to minimize its possible confusion. Identified by a sign reading "Not an Exit", "To Basement," "Storeroom," "Linen Closet," or the like.
- In every building or structure equipped for artificial illumination, adequate and reliable illumination shall be provided for all exit facilities.

5.3.4 TRAINING

Currently, there is no institutional training module for the Means of Egress and Walk and Working Surfaces Program. However, all affected populations are required to read this program and comply with the requirements discussed in this section.

5.3.5 PERFORMANCE CHECKLISTS

Supervisors / Group Leaders / Department Managers shall:

- ❑ Maintain all areas in a clean and orderly manner.
- ❑ Ensure employees and contractors performing work at the facility adhere to the Walking and Working Surfaces Program.

Employees shall:

- ❑ Maintain all areas in a clean and orderly manner.

Ames Laboratory Director (or Deputy Director) shall:

- ❑ Support ESH&A to ensure all walking and working surfaces are maintained in a clean and orderly manner.

Environment, Safety, Health & Assurance (ESH&A) shall:

- ❑ Conduct random and annual inspections to ensure employees are adhering to the Walking and Working Surfaces Program.
- ❑ Conduct General Employee Training and refresher training.
- ❑ Review changes to the regulatory requirements and update program as necessary.

5.4 VEHICLE MOUNTED ELEVATING & ROTATING WORK PLATFORMS

Applicability Statement: *This section applies to all employees and contractors who utilize Vehicle Mounted Elevating and Rotating Work Platforms and Scissors lifts.*

5.4.1 REFERENCES

29 CFR 1910.333(c)(3) Selection and Use of Work Practices
OSHA 1910.66 Powered Platforms for Building Maintenance
OSHA 1910.67 Vehicle Mounted Elevating and Rotating Work Platforms
OSHA 1926. 450 Scaffolds
OSHA 1926.451 General Requirements
OSHA 1926.452 Additional requirements applicable to specific types of scaffolds.
OSHA 1926.453 Aerial Lifts
ANSI Standards A92.2-1969 Vehicle Mounted Elevating Rotating Work Platforms

5.4.2 BACKGROUND

This program includes but is not limited to the following vehicle mounted elevating devices:

- Scissors Lifts
- Extensible Boom Platforms
- Aerial Ladders
- Articulating Boom Platforms

This program does not address Powered Platforms for Building Maintenance (OSHA 1910.66) or (OSHA 1910.68). Fire fighting equipment is also not subject to this program.

5.4.3 PROGRAM INFORMATION

- Aerial lifts may be field modified provided the modification has been certified in writing by the manufacturer that it still meets the applicable ANSI Standard requirements.

- Operators shall comply with the requirements of OSHA 29 CFR 1910.333(c)(3) (Selection and Use of Work Practices) for operations near overhead electric lines.

- Lift controls shall be tested each day (mandatory) prior to use to determine that the controls are in safe working condition.

- Only trained persons may operate the aerial lift.

- Contractors are not to use Ames Laboratory lifts unless authorized and trained to Ames Laboratory requirements.

- Belting off to an adjacent pole, structure or equipment while working from an aerial lift is not permitted.

- Do not sit or climb on the edge of the basket. Keep both feet on the floor of the basket at all times.
- Do not use ladders or other devices on lift platforms.
- Wear a full body harness attached to the boom or basket for vehicle mounted elevating and rotating work platforms including extensible boom platforms, aerial lifts, articulating boom platforms or vertical towers.
- Scissors lifts including those with platforms that extend beyond the equipment wheelbase do not require employees to be tied off when working provided the railing is in tact and employees don't climb the railing to work.
- Do not exceed boom and basket load limits specified by the manufacturer.
- Ensure that outriggers are positioned on pads or a solid surface as necessary.
- Use wheel chocks when an aerial lift is used on an inclined surface.
- Do not move the truck when the boom is elevated in a working position and personnel are in the basket unless the equipment is specifically designed to do this. Articulating and extensible booms designed primarily as personnel carriers must have controls on the platform and at ground level.
- Platform controls must be within easy reach of the operator.
- Lower controls must be able to override the platform controls.
- All controls must be plainly marked as to their function.
- Do not operate the lower controls unless the person in the lift has granted permission, except in case of emergency.
- Do not alter the insulated portion of an aerial lift in any manner that might reduce its insulating value.
- Before moving an aerial lift for travel, inspect it to see that it is properly cradled and outriggers are in a stowed position.
- A man basket used on the forks of a lift truck is prohibited.

5.4.4 TRAINING

Detailed programmatic information is provided via the following institutional training modules:

VEHICLE MOUNTED ELEVATING & ROTATING WORK PLATFORMS #AL-144	
Intended Audience:	*Mandatory for all workers whose job assignment involves use of vehicle mounted elevating & work platforms.*
Module Format:	*Module is a video with handbook and quiz. Estimated completion time: 1.5 hours / exam.*
Associated Retrain Period & Format:	*Three-year retrain*

Group / activity-specific training shall be given to each employee prior to start of work. Training will include a discussion of physical hazards, proper operation, safety requirements, hazard mitigation, emergency response measures, procedural information and other safety information. This training shall be documented by the Group Leader / Department Manager.

5.4.5 PERFORMANCE CHECKLISTS

Supervisors / Group Leaders / Department Managers shall:

- ❑ Ensure that all questions pertaining to the Powered Platform Program are appropriately answered for each employee on the Training Needs Questionnaire and that all hazards are denoted on the Hazard Inventory.
- ❑ Ensure that employees attend any required training.
- ❑ Ensure employees and contractors performing work at the facility adhere to the Powered Platform Program.

Employees shall:

- ❑ Attend required Powered Platform course as denoted on Employee Training Profile. Consult the Ames Laboratory/IPRT training schedule for the next available class.
- ❑ Adhere to the requirements set forth in the Powered Platform Program.
- ❑ Conduct inspection every day the equipment is used or at the beginning of each shift.

Contractors shall:

- ❑ Ensure their equipment meets the applicable ANSI Standards.
- ❑ Ensure their employees are qualified and trained in the safe operation of the lifts as required by the OSHA Standard.
- ❑ Comply with Ames Laboratory ESH&A requirements as applicable.

Facilities Services shall:

- ❑ Ensure contractors performing work at the facility adhere to the Powered Platform Program.

Environment, Safety, Health & Assurance (ESH&A) shall:

- ❑ Conduct random and annual inspections to ensure employees are adhering to the Powered Platform Program.
- ❑ Develop and conduct Powered Platform Program Training and refresher training.
- ❑ Review changes to the regulatory requirements and update program as necessary.

5.5. POWERED INDUSTRIAL VEHICLES

Applicability Statement: *This section applies to all employees and contractors who operate Powered Industrial Vehicles such as fork lifts and powered pallet jacks.*

5.5.1 REFERENCES

OSHA 1910.178 Powered Industrial Trucks
ANSI Standard B56.1 Powered Industrial Trucks
Appendix A Ames Laboratory Forklift Inspection Checklist (Form 46300.057)

5.5.2 BACKGROUND

A powered industrial vehicle means an internal combustion engine or electric motor powered vehicle used for material handling. This would include sit down forklift trucks, standup forklift trucks, and motorized hand trucks.

NOTE: Hand operated carts, lifts, etc., having no motorized force beyond that of the operator, are excluded.

5.5.3 PROGRAM INFORMATION

5.5.3.1 General Safety Requirements

- Employees that need to operate a powered industrial vehicle must be trained.

- All operators must inspect the powered industrial vehicles before each use or beginning of each shift by completing the "Ames Laboratory Forklift Inspection Checklist", (see Appendix A) which is attached to each Powered Industrial Vehicle. Inspection forms when completely filled out must be returned to program that own the equipment for documentation and auditing.

  - If the vehicle is in need of repair, remove it from service immediately. Do not use the vehicle until repairs are completed.
  - The vehicle must be tagged out of service by operator until repairs are completed.
  - Failure to tag out the vehicle is a serious issue and may result in disciplinary action.

- Contractors and vendors are prohibited from using Ames Laboratory powered industrial vehicles unless approved by ESH&A (for training, insurance, etc). The cost of renting equipment should be figured into the contractor's overhead. Ames Laboratory will not assume liability for equipment or hardware damage. Contractors must demonstrate powered industrial vehicle operating competency for each driver in the event ESH&A grants approval.

- Modifications or additions to Powered Industrial Vehicles shall not be performed by Ames Laboratory without the manufacturer's prior written approval.

- Changing and charging batteries shall be performed in areas designated for that purpose, with adequate ventilation and eye wash facilities immediately available.

- Precautions shall be taken to prevent Hot Work in battery charging areas (no open flames, welding, grinding, soldering, sparks or electric arcs, smoking).

5.5.3.2 Operation Rules for Powered Industrial Vehicles

- Trucks shall not be driven up to anyone standing in front of a bench, wall or other fixed object.

- No person shall be allowed to stand or pass under the elevated portion of any truck, whether loaded or empty.

- Employees shall not ride (as passengers) anywhere on powered industrial vehicles.

- Employees shall not place arms or legs between the uprights of the mast or outside the running lines of the truck.

- When a powered industrial truck is left unattended, load-engaging (forks) means shall be fully lowered, controls shall be neutralized, power shall be shut off and brakes set. Wheels shall be blocked if the truck is parked on an incline.

- Brakes shall be set and wheel blocks or a catch mechanism must be in place to prevent movement of trucks/trailers while loading or unloading with a Powered Industrial Vehicle.

- The tractor trailer must be inspected by the operator prior to entering the trailer.

- Only industrial trucks approved in hazardous locations shall be used in such cases.

- Aisles, intersections and access to fire and emergency equipment shall be kept clear. Do not park/stage/store powered industrial vehicles in these locations.

5.5.3.3 Traffic Regulations to be observed by Powered Industrial Vehicles

- A safe distance shall be maintained approximately three truck lengths between Powered Industrial Vehicles.

- The Powered Industrial Vehicle must be under control at all times.

- The driver shall slow down and sound the horn at cross aisles and other locations where vision is obstructed. If the load being carried obstructs forward view, the driver shall travel backward with the load trailing.

- When ascending or descending grades in excess of 10 percent, loaded trucks shall be driven with the load upgrade.
- Under all travel conditions the truck shall be operated at a speed that will permit it to be brought to a stop in a safe manner.
- Stunt driving and horseplay is not permitted.
- The weight of the powered industrial vehicle must be compared with the weight load capacity of the elevator to ensure the elevator is not overloaded.
- Elevators shall be approached slowly, and then entered squarely after the elevator car is properly leveled. Once on the elevator, the control shall be neutralized, power shut off and the brakes set. Operators are not to ride with the powered industrial vehicle on the elevator.
- Motorized hand trucks must enter elevators or other confining areas with load end forward.
- Running over loose objects on the roadway/aisle surface must be avoided.
- While negotiating turns, speed shall be reduced and turning shall be in a smooth sweeping motion.
- Only loads within the rated capacity of the vehicle shall be handled.
- Immediately report damage of property to the powered industrial vehicle to Supervisor/Group Leader/Department Manager, ESH&A or Facilities Services Group.

5.5.3.4 Personal Protective Equipment (PPE) Requirements

- Steel toed safety shoes;
- Hard hats;
- Safety glasses;
- Leather gloves when handling rough/sharp materials;
- Chemical-resistant gloves when potentially exposed to chemicals; and

5.5.4 TRAINING

Detailed programmatic information is provided via the following institutional training modules:

FORK TRUCK TRAINING	**#AL-013**
Intended Audience:	*Mandatory for all workers whose job assignment involves use of Powered Industrial Vehicles.*
Module Format:	*Module is presented by ISU EH&S. It is classroom with exam and a practical factors evaluation.* *Estimated completion time: 2.0 hours*
Associated Retrain Period & Format:	*Three (3) Year Retrain unless regulations change, deficiencies are determined or new equipment is purchased.*

Group / activity-specific training shall be given to each employee prior to work that includes a discussion of equipment specific operation, physical hazards and other procedural information. This training shall be documented by the Group Leader / Department Manager.

5.5.5 PERFORMANCE CHECKLISTS

Supervisors / Group Leaders / Department Managers shall:

- ❑ Ensure that all questions pertaining to the Powered Industrial Vehicles are appropriately answered for each employee on the Training Needs Questionnaire and that all hazards are denoted on the Hazard Inventory.
- ❑ Ensure that employees attend required training.
- ❑ Ensure employees and contractors performing work at the facility adhere to the Powered Industrial Vehicle Program.

Employees shall:

- ❑ Attend required Powered Industrial Vehicle Training as denoted on Employee Training Profile. Consult the Ames Laboratory/IPRT training schedule for the next available class.
- ❑ Fully adhere to the requirements set forth in the Powered Industrial Vehicle Program.
- ❑ Conduct Inspection every day the equipment is used or at the beginning of each shift.

Contractors shall:

- ❑ Ensure their equipment meets the applicable ANSI Standards.
- ❑ Ensure their employees are qualified and trained in the safe operation of the Powered Industrial Vehicles as required by the OSHA Standards.
- ❑ Comply with Ames Laboratory rules as applicable.

Environment, Safety, Health & Assurance (ESH&A) shall:

- ❑ Conduct random and annual inspections to ensure employees adhere to the Powered Industrial Vehicle Program.
- ❑ Develop and conduct Powered Industrial Vehicle Training and refresher training.
- ❑ Periodically review regulations requirements and update program as necessary.

Appendix A

Ames Laboratory Forklift Inspection Checklist

Prior to the use ***of an Ames Laboratory forklift the following inspection items are to be checked to insure that the forklift is in good working order and that operation of the forklift will not endanger the operator or workers in the area of the forklift's operation. The following inspection needs to be completed only once per day.*** Form # 46300.057

This inspection checklist is for: (Place an "X" in the box to the left of the forklift being inspected)

	Forklift	Location		Forklift	Location		Forklift	Location
	Clark-0169	MMB		Yale-M106819	RWB		Namco-803172	B1 SPH
	Ross-6272	MMB		Yale-P161424	MMB		Clark-TM17	CWH

An Explanation of the inspection items listed below and the inspection procedures can be found on the back of this form. Place an "O" in the box if an inspection item checks out "OK". Place an "X" in the box if an inspection item is deemed unsatisfactory. When an item is marked with an "X" fill out the back of this form to indicate the malfunction and the corrective action. All items must be marked with an "O" before using the forklift.

Date	1. Obvious Damage	2. Tires	3. Battery Indicator *	4. Engine Fluid Levels	5. Hydraulic System	6. Leaks	7. Forks & Carriage	8. Hydraulic Controls	9. Warning Lights	10. Horn	11. Emergency Brake	12. Steering	13. Brakes	14. Backup Alarm		Initials

*- Check battery indicator on electrical forklift only.

Forklift Inspection Checklist Instructions

If damage to the forklift is noted or a checklist item does not meet the criteria described below, the user should contact their supervisor to determine a corrective course of action. Do not use the forklift until all checklist items are listed as "OK" per the instructions below. Follow the instructions below for each of the Forklift Inspection Checklist Items:

1. Obvious Damage – Inspect the forklift for damage to the structural and mechanical aspects of the equipment. Look for cracks in the frame or in the lift mechanism. Any damage that jeopardizes the workability of the equipment or its ability to carry a load should be noted.
2. Tires – Inspect the tires. Are they in good condition and are the pneumatic tires inflated properly?
3. Battery Indicator – Check the battery indicator on the electric forklift to insure the batteries are properly charged.
4. Engine Fluid Levels – Check the fuel levels (propane or gas) to insure there is an adequate amount to perform the intended work. Check the engine oil to insure it is at the proper level.
5. Hydraulic System – Inspect the hydraulic system for leaks. Check the condition of the reservoir and hoses. Is the reservoir adequately filled and are there any cracks or damage to the hoses?
6. Leaks – Survey the entire forklift, and the area in which it is parked, for any other fluid leaks.
7. Forks and Carriage – Are the forks and carriage in good condition? Both the forks and carriage should be structurally intact and not bent. Test the fork locking mechanism to insure that it works properly and does not allow the fork to move on the carriage. Before any lifting, check the placement of the forks to insure they are properly positioned and locked in to place on the carriage.

Turn the forklift on to test the remainder of the checklist items:

8. Hydraulic Controls – Test the controls for manipulating the forklift. Move the forklift in all directions looking for smooth operation and listening for unusual sounds indicating worn or broken parts.
9. Warning Lights – Turn on the warning lights to insure they are working properly.
10. Horn – Test the horn to insure that it works.
11. Emergency Brake – With the emergency brake on, slowly begin moving the forklift forward and then backward to test the emergency brake. The emergency brake should not allow the forklift to move forward or backward. **Caution -- Do not engage a lot of power to move the forklift forward or backward. This may damage the emergency brake.**
12. Steering – Turn the steering wheel all the way to the left and then back all the way to the right. Does the steering perform adequately?
13. Brakes – Move the forklift forward and apply the brakes. Move the forklift backward and apply the brakes. Do the brakes perform adequately in both the forward and backward movement?
14. Backup Alarm – Move the forklift in a backward direction. Does the backup alarm make a loud sound to indicate to anyone in the proximity of the equipment that it is moving in a backward direction?

If any of the items above are deemed unsatisfactory fill out the following form:

Date	Checklist Item #	Description of Unsatisfactory Condition	Date Corrected	Corrected by (Employee #)

Forward completed forms to Purchasing and Property Services for forklift #Clark-TM17 and Ames Laboratory Facilities Services administrative office for the remaining forklifts. Contact each of these offices for new forms.

5.6 PERSONAL PROTECTIVE EQUIPMENT (PPE)

Applicability Statement: *This section applies to all employees, visitors and contractors who are potentially exposed to hazards of the eye, skin, feet, hands and head. Hazards encountered that can not be eliminated by engineering controls (interlocks, guards, barriers, etc.)or administrative (signs, SOP's, training), Personal Protective Equipment (safety glasses, face shields, steel toed shoes, hard hats, gloves, etc.) must be utilized.*

Note: *Respiratory Protection and Hearing Protection are covered specifically in the Industrial Hygiene Section of the manual.*

5.6.1 REFERENCES

ANSI Z41.1 Standard for Personal Protection-Protective Footwear
ANSI Z87.1 Standard Practice for Occupational and Educational Eye and Ear Protection
ANSI Z89.1 Standard for Personal Assurance Protection-Protective Headwear for Industrial Workers Requirements
OSHA 1910.132 General Requirements
OSHA 1910.133 Eye and Face Protection
OSHA 1910.134 Respiratory Protection
OSHA 1910.135 Head Protection
OSHA 1910.136 Foot Protection
OSHA 1910.137 Electrical Protective Equipment
OSHA 1910.138 Hand and Arm Protection
Chemical Compatibility Charts
Form 10200.095 Personal Protective Equipment Needs Assessment
Procedure 10200.010 Readiness Review

5.6.2 BACKGROUND

OSHA requires the use of Personal Protective Equipment (PPE) whenever a hazard cannot be engineered out or administratively controlled. OSHA also requires the employer to provide PPE including protective equipment for the eyes, face, head, feet and in some instances protective clothing. Those hazards include, but are not limited to, chemical hazards, environmental hazards, radiological hazards, mechanical hazards, irritants etc. Personal Protective Equipment must meet ANSI Standards for hazards identified.

Ames Laboratory is required to perform a hazard assessment and equipment selection survey. Included in this assessment, Ames Laboratory shall determine if hazards are present or are likely to be present which necessitate the use of PPE. If hazards are present, or likely to be present, Ames Laboratory shall:

1. Select and have each affected employee use the types of PPE that will protect the affected employee from the identified hazard.
2. Communicate PPE selection decisions to each affected employee.
3. Provide PPE that properly fits each employee.

5.6.3 PROGRAM INFORMATION

5.6.3.1 Eye Protection Requirements

- Employees requiring eye protection shall be trained on proper use of PPE.
- Eye and face protection shall be used in any area or operation where a potential eye and/or face hazard exists.
- Protective eye and face devices shall comply with ANSI Z87.1. Eye and face PPE shall be distinctly marked to facilitate compliance.
- Contact lenses are not a form of PPE and shall not be worn in areas that have a potential for eye hazards such as when handling liquid or gaseous chemicals.
- Prescription safety glasses are provided at no cost to the employee by the research group or administrative department.
- Affected employees who wear prescription lenses while engaged in operations that involve eye hazards shall wear eye protection that incorporates the prescription in its design or shall wear eye protection that can be worn over the prescription lenses without disturbing the proper position of either the prescription lenses or the protective devices.
- Contractors, visitors, tours and vendors are subject to all provisions of this procedure.
- PPE for contract employees will be provided by the contract company, not Ames Laboratory.
- The Ames Laboratory escort shall be responsible for tours and visitors complying with these guidelines.
- Side shields are required on safety glasses.
- When entering areas posted with specific PPE requirements, entering those areas without the PPE is prohibited.
- When entering non-posted area where certain limited (i.e., not performed routinely) hazards operations are present, the appropriate PPE shall be worn.
- Goggles or a face shield shall be worn when transferring acids or caustics of volumes over 1 Liter (approximately 1 quart), flying particles or other eye hazards.
- Prescription lenses for full-face respirators will be provided at no cost to the employee by the research group or administrative department.

5.6.3.2 Head Protection Requirements

- Employees requiring head protection shall be trained on proper use of head protection PPE.

- Protective helmets shall comply with ANSI Z89.1.

- Protective helmets shall be worn to provide protection where there exists the threat of head injuries from impact, penetration from flying objects, or from limited electric shock and burn hazards.

- Employees, contractors, vendors and all others are subject to all provisions of this procedure. Contractor employees shall be provided head protective equipment by their contract firm or employer.

- Visitors will wear head protection in accordance with this procedure. The Ames Laboratory escort shall be responsible for the visitor complying with these requirements.

5.6.3.3 Foot Protection Requirements

- Employees requiring foot protection shall be trained on proper use and the limitation of foot protection PPE.

- It is mandatory that solid, non-perforated shoes be worn at all times by personnel who wok in laboratories where chemical exposures are possible. Bare feet, sandals and open-toed shoes are not permitted in chemical laboratories. The need for additional foot protection such as metatarsal protection, HAZMAT boots, etc. shall be determined by the lab supervisor with assistance from the Chemical Hygiene Officer or the Industrial Safety Specialist.

- Foot protection shall be used in any area posted as required or any operation where a potential foot injury exists due to falling or rolling objects. Protective foot wear shall comply with ANSI Z41.-1991.

- Foot protection will be provided at no cost to the employee by the research group or administrative department.

- Subcontractors, Manpower, or temporary employees are subject to the requirements of this foot protection program and must assure Ames Laboratory that their employees will wear safety footwear. The subcontractor must make all of their subcontractors are aware and comply with this program.

- The requirement of safety footwear **does not pertain to visitors**, although it is required by the Ames Laboratory escort to maintain a safe distance from hazardous operations. If a safe distance can not be attained, access / exposure shall be prohibited. However, Department of Energy (DOE) employees from other locations are not considered visitors and are subject to the requirements of this program.

5.6.3.4 Hand and Arm Protection Requirements

- Employees requiring hand protection shall be trained on proper use and limitations of hand and arm protection PPE.
- Hand protection shall be used in any area or operation where a potential hand hazard exists.
- Hand protection must be designed for the hazards generated.
- Contractors and vendors are subject to all provisions of this procedure. Contract employees will be provided the necessary hand protection by their contract firm or employer.
- More than one type of glove may be required based on the type of hazard(s) present.
- Employees must be able to remove the gloves in such a manner as to prevent skin contamination during removal.
- When there is a possible hazard to the forearm, extended gloves or gauntlet sleeves (forearm to wrist coverings) must be worn.
- For mixtures and formulated products (unless specific test data are available), a glove should be selected on the basis of the chemical component with the longest breakthrough time, since it is possible for solvents to carry toxic ingredients through polymeric materials.
- With respect to the selection of gloves for protection against chemical hazards, employees should contact their Supervisor/Group Leader/Manager or ESH&A.

5.6.4 TRAINING

Detailed programmatic information is provided via the following institutional training modules:

PERSONAL PROTECTIVE EQUIPMENT (PPE) TRAINING #AL-133	
Intended Audience:	*Mandatory for all workers whose job assignment involves use of PPE including safety glasses, face shields/goggles, foot protection, gloves, hearing protection, etc.*
Module Format:	*The institutional training for PPE is either computer based training or classroom training. Both training modules contain the following information:* • *Hazard Control Hierarchy* • *Care and maintenance of PPE* • *Proper fit of PPE* • *Rules and Regulations* • *Both require a quiz.* *Estimated completion time: 1.0 hours*
Associated Retrain Period & Format:	*No Retrain*

Group / activity-specific PPE training shall be given to each employee prior to work. The training will include a discussion of physical hazards, chemical hazards, hazard mitigation, and, emergency response measures. This training shall be documented by the Group Leader / Department Manager.

5.6.5 PERFORMANCE CHECKLISTS

Group Leaders / Department Managers shall:

- ❑ Ensure that all questions pertaining to the Personal Protective Equipment Program are appropriately answered for each employee on the Training Needs Questionnaire and that all hazards are denoted on the Hazard Inventory.
- ❑ Attend PPE Training. Consult the Ames Laboratory/IPRT training schedule for the next available class.
- ❑ Ensure employees and contractors performing work at the facility adhere to the PPE Program.
- ❑ Participate in Readiness Reviews to complete PPE Survey/Certification.

Employees shall:

- ❑ Attend required course as denoted on Employee Training Profile.
- ❑ Maintain Personal Protective Equipment in a clean and working order.
- ❑ Fully adhere to the requirements set forth in the Personal Protective Equipment Program.

Environment, Safety, Health & Assurance (ESH&A) shall:

- ❑ Conduct random and annual inspections to ensure employees are adhering to the Personal Protective Equipment Program.
- ❑ Develop and conduct Personal Protective Equipment Program Training.
- ❑ Survey and evaluate all Activities to determine PPE requirements based on hazards involved. See Personal Protective Equipment Needs Assessment (Form #10200.095 for certification).
- ❑ Conduct Readiness Reviews (Procedure 10200.010).

5.7 MACHINE GUARDING

Applicability Statement: *This section applies to all employees who utilize powered industrial machinery including but not limited to wood working machinery, abrasive wheel machinery, power presses, mechanical power transmission apparatus, portable machinery, metal working machinery, etc.*

5.7.1 REFERENCES

- OSHA 1910.212 General Requirements for All Machines
- OSHA 1910.213 Woodworking Machinery Requirements
- OSHA 1910.215 Abrasive Wheel Machinery
- OSHA 1910.216 Mills and Calendars
- OSHA 1910.217 Mechanical Power Presses
- OSHA 1910.218 Forging Machines
- OSHA 1910.219 Mechanical Power Transmission Apparatus
- OSHA 1910.242 Hand and Portable Powered Tools and Equipment
- OSHA 1910.243 Guarding of Portable Powered Equipment

5.7.2 BACKGROUND

The purpose of this program is to establish the minimum requirements for machine guarding to eliminate the possibility of an injury or property damage due to any moving parts of any machines if not properly guarded. Because OSHA cannot create guarding requirements for every possible machine configuration, certain general requirements have been established to ensure the safety of the operator and other employees. One or more methods of machine guarding must be provided for all machinery from hazards such as those created by point of operation, nip points, rotating parts, flying chips, sparks etc. Examples of guarding methods include:

- Barrier Guards
- Two Handed Tripping Devices
- Electronic Safety Devices
- Foot Pedals
- Presence Sensing Devices
- Light Curtains

NOTE: OSHA does not grant a grandfather clause for old equipment. All equipment must be guarded.

NOTE: Equipment specific guidelines can be obtained from ESH&A.

5.7.3 PROGRAM INFORMATION

The following is an index to specific machine guarding requirements:

Section	Title	Figures
5.7.3.1	General Safety Requirements For All Machinery	
5.7.3.2	Machine Controls and Equipment	
5.7.3.3	Inspection and Maintenance of Machinery	
5.7.3.4	Hand Fed Circular and Crosscut Table Saws	Appendix A1
5.7.3.5	Radial Arm Saws	Appendix A2
5.7.3.6	Band Saws	Appendix A3
5.7.3.7	Drill Presses	Appendix A4
5.7.3.8	Abrasive Wheel Machinery	Appendix A5
5.7.3.9	Portable Abrasive Wheels	
5.7.3.10	Metal Cut Off Saw	Appendix A6
5.7.3.11	Vertical Milling Machine	Appendix A7
5.7.3.12	Lathe	Appendix A8
5.7.3.13	Surface Grinder	Appendix A9
5.7.3.14	Ames Laboratory Fabricated Equipment	

5.7.3.1 Requirements for All Machinery & Equipment

- One or more methods of machine guarding must be provided to protect the operator and other employees for all machinery from hazards such as those created by point of operation, nip points, rotating parts, flying chips and sparks. Examples of guarding methods are:

  - Barrier Guards;
  - Two-handed Tripping Devices;
  - Electronic Safety Devices;
  - Foot Pedals;
  - Presence Sensing Devices;
  - Light Curtains.

- The point of machine operation which exposes an employee to injury must be guarded. The guarding device must be in conformity with any appropriate standard and in the absence of applicable specific standards must be so designed and constructed as to prevent the operator from having any part of his/her body in the danger zone during the operating cycle.

- Old and new machines and equipment must meet the requirements of this section. If equipment has been purchased without the required guarding or the guarding has been removed, the equipment must be locked and tagged out of service (see Section 5.12) until the appropriate guarding is provided.

- Special handling tools for placing, removing and manipulating material must be designed to permit easy handling of material without the operator placing a hand in the danger zone. Such tools must not be in lieu of other guarding required by this program, but can only be used to supplement protection provided.

- Revolving barrels, containers and drums must be guarded by an enclosure, which is interlocked with the drive mechanism so that the barrel, container or drum cannot revolve unless the guard enclosure is in place.

- Vibrating machinery designed for a fixed location must be securely anchored to the floor to prevent walking or moving.

- Any employee who operates machinery must be trained in the proper operation of the machinery, be familiar with the hazards of the machinery, and use appropriate protective devices while operating the machinery.

- Malfunctioning machinery must be reported immediately to Facilities Services Group or Engineering Services Group and the machine must be locked and tagged out of service (see Section 5.12) with a sign indicating "Out of Service", "Machine Guarding Absent", etc. Signs may be obtained from ESH&A.

- Guards may not be removed during any operation. Guards shall prevent access to the danger area from the top, front, sides, bottom and back.

- All guards must be designed for the specific job and machine with provisions made for oiling, inspecting, adjusting and repairing of machine parts.

- All belts, pulleys, gears, sprockets, shafts, chains and moving parts must be guarded.

- When the blades of a fan are less than seven (7') feet above the floor or working level, the blades shall be guarded. The guard shall have no openings larger than on half (1/2') inch.

- Signs shall be posted on machinery to communicate hazardous conditions (Danger, Caution, Warning) per 29 CFR 1910.145 (Specifications for Accident Prevention Signs and Tags).

5.7.3.2 Machine Controls and Equipment

- A mechanical or electrical power control device must be provided at the point of operation on each machine to make it possible for the operator to cut off the power from each machine without leaving his/her position. The power controls must be located so as to make it unnecessary for him/her to reach over the hazard to make adjustments.

- Where injury to the operator might result if motors were to restart after a power failure, provisions must be made to prevent machines from automatically restarting upon restoration of power.

- For each machine operated by electric motors or stored hazardous energy, positive means must be provided for rendering such controls or devices inoperable while repairs or adjustments are being made to the machines they control (see Section 5.12 Lockout/Tagout Program in the ESH&A Program Manual).

- Servicing or performing maintenance of equipment powered by cord and plug can be disconnected by unplugging from wall outlet. The cord must be locked out if the male end is not in control of the operator at all times.

- Each operating pedal/treadle must be protected against unexpected or accidental activation/tripping.

5.7.3.3 Inspection and Maintenance of Machinery

The following are the Inspection and Maintenance Requirements for Machinery:

- Immediately remove from service all dull, badly set, improperly filed or improperly tensioned saws before they begin to cause material to stick, jam, or kick back.

- Maintain all knives and cutting heads of machines sharp, properly adjusted and firmly secured.

- Keep all bearings free from loose motion and well lubricated.

- Arbors of all circular saws must be free from play (it should not be loose when pressure is applied against the arbor).

- Clean woodworking machinery after each use to ensure the effectiveness of guards and the prevention of fire hazards in switch enclosures, bearings, and motors.

- All cracked saws must be removed from service.

- Inserting wedges between saw blades and the collar to form a "Wobble Saw" is not permitted.

5.7.3.4 Requirements for Table Saws

- Push sticks or push blocks must be provided at the saw or other equipment requiring such in the several sizes and types suitable for the work to be done.

- Circular hand-fed rip and crosscut table saws must be guarded by a hood which must completely enclose that portion of the saw above the table and that portion of the saw above the material being cut. The hood and mounting must be so arranged so that the hood will automatically adjust itself to the thickness of and remain in contact with the material being cut. The hood must not offer any considerable resistance to insertion of the material to saw or to passage of the material being sawed.

- The rip saw must be furnished with a spreader to prevent material from squeezing the saw blade. The spreader must be so attached that it will remain in true alignment with the saw even when blade is tilted.

NOTE: A spreader in connection with grooving, dadoing, or rabbiting is not required. On completion of such operations, the spreader must be immediately replaced.

- The rip saw must be furnished with non-kickback fingers or dogs so located as to oppose the thrust or tendency of the saw to pick up the material or to throw it back toward the operator.

  See Appendix A1 for Table Saw Guarding Examples.

5.7.3.5 Requirements for Radial Arms Saws

- The upper portion of the blade must be completely enclosed including the end of the saw arbor. The sides of the lower exposed portion of the blade must be guarded to the full diameter of the blade by a device that will automatically adjust itself to the thickness of the stock and remain in contact with stock being cut to give maximum protection possible for the operation being performed.

- Radial arm saws used for ripping must be provided with non-kickback fingers or dogs located on both sides of the saw so as to oppose the thrust or tendency of the saw to pick up the material or to throw it back toward the operator.

- An adjustable stop must be provided to prevent the forward travel of the blade beyond the position necessary to complete the cut in repetitive operations.

- Installation must be in such a manner that the front end of the unit will be slightly higher than the rear, so as to cause the cutting head to return gently to the starting position or a mechanical return mechanism must be used.

- Ripping must be against the direction the saw turns.

  See Appendix A2 for Radial Arm Saw Guarding Examples.

5.7.3.6 Guarding Requirements for Band Saws

- All portions of the saw blade must be enclosed or guarded except for the working portion of the blade between the bottom of the guide rolls and the table. Bandsaw wheels must be fully encased. The outside periphery of the enclosure must be solid. The front and back of the band wheels must be either enclosed by solid material or by wire mesh or perforated metal. Such mesh or perforated metal must not be less that .037 inch (U.S. Gage No. 20) and the openings must not be greater than three-eighths inch.

- The guard must be self adjusting to raise and lower with the guide. The upper wheel guard must be made to conform to the travel of the saw on the wheel.

- Each bandsaw must be provided with a tension control device to indicate a proper tension for the standard saws used on the machine, in order to assist in the elimination of saw breakage due to improper tension.

  See Appendix A3 for Band Saw Guarding Examples.

5.7.3.7 Requirements for Drill Presses

- Because a drill press is top heavy, all drill presses must be bolt anchored to the floor.

- The electrical disconnect switch must be readily available and lockable. The switch must also be readily identifiable and located on the machine.

- The work must be restrained / secured to prevent material rotation.

  See Appendix A4 for Drill Press Guarding Examples.

5.7.3.8 Requirements for Guarding Abrasive Wheels

- The safety guards must cover the spindle end, nut and flange projections.

- The safety guard must be mounted to maintain proper alignment with the wheel and the strength of the fasteners must exceed the strength of the guard.

- Grinding machines must be equipped with flanges.

- Work rests must be used to support the work. The work rests must be of rigid construction and designed to be adjustable to compensate for wheel wear. Work rests must be kept adjusted closely to the wheel with a maximum opening of 1/8 inch to prevent the work from being jammed between the wheel and the rest, which may cause breakage. The work rest must be adjusted immediately when out of tolerance. Check the tolerance after each use.

- Tongue guards must be used to enclose the upper portion of the abrasive wheel. The tongue guard must be of rigid construction and designed to be adjustable to compensate for wheel wear. Tongue guards must be kept adjusted closely to the wheel with a maximum opening of 1/4 inch to prevent material/fragments from flying towards the operator. The tongue guard must be adjusted immediately when out of tolerance. Check the tolerance after each use.

- All abrasive wheels must be mounted between flanges which are not less than one-third the diameter of the wheel.

- Immediately before mounting, all wheels must be closely inspected and ring tested by the user to ensure they have not been damaged in transit, storage, or otherwise. A ring test procedure for abrasive wheels consists of lightly tapping the wheel with a nonmetallic device. An undamaged wheel will produce a clear "ring". A cracked wheel will sound dull or "dead". Immediately remove from service any wheel that fails the ring test. Render the wheel unusable (break) and discard in the trash.

- The spindle speed of the machine must be checked before mounting of the wheel to be certain that it does not exceed the maximum operating speed marked on the wheel.

  See Appendix A5 for Abrasive Wheel Guarding Examples.

NOTE: Natural sand stone wheels and metal, wooden, cloth or paper discs having a layer of abrasive on the surface are not regulated by OSHA.

5.7.3.9 Requirements for Portable Abrasive Wheels

- A safety guard must cover the spindle end nut and flange projections. The safety guard must be mounted so as to maintain proper alignment with the wheel.

- Safety guards must have a maximum exposure angle of 180 degrees (covering one half of the wheel) and the guard must be so located so as to be between the operator and the wheel during use. Adjustment of the guard must be such that pieces of an accidentally broken wheel will be deflected away from the operator.

- All wheels must be closely inspected and ring tested by the user prior to mounting on the equipment.

- The spindle speed of the machine must be checked with the rating of the wheel being used.

- All contact surfaces of wheels, blotters and flanges must be flat and free of foreign matter.

- When a bushing is used in the wheel hole, it must not exceed the width of the wheel and must not contact the flanges.

NOTE: The requirements of portable grinders do not apply to:
- wheels with a diameter of 2 inches or less;
- wheels used for internal grinding while within the work being ground; or
- cloth or paper discs having a layer of abrasive on the surface.

5.7.3.10 Requirements for Metal Cut Off Saws

- Stock fastening chuck must be functional and in use;
- Power transmission mechanism must be fully guarded;
- Check blade travel for proper direction; and
- Ensure unused portion of blade is guarded against accidental contact.

  See Appendix A6 for Cut Off Saw Guarding Requirements.

5.7.3.11 Requirements for Vertical Milling Machines

- Hand-wheels must be disengaged to prevent inadvertent motion in rapid traverse;
- Power transmission system must be guarded;
- Electrical disconnect switch is readily available and lockable; and
- Electrical disconnect is properly identified and located on machine

See Appendix A7 for Vertical Milling Machine Guarding Requirements.

5.7.3.12 Requirements for Lathes

- Power transmission system must be guarded;
- Electrical disconnect switch must be readily available and lockable;
- Electrical disconnect must be properly identified and located on machine; and
- No protrusions on chuck or faceplate beyond the periphery unless guarded.

See Appendix A8 for Lathe Guarding Requirements.

5.7.3.13 Requirements for Surface Grinders

- Machine must be bolted/anchored to prevent movement (walking) from vibration;
- Spindle speed and wheel speed must match;
- Power transmission system must be guarded;
- Table shields must be in place;
- Wheel guard cover must cover at a minimum 210 degrees of wheel;
- Electrical disconnect switch must be readily available and lockable; and
- Electrical disconnect must be readily identifiable and located on machine.

See Appendix A9 for Surface Grinder Guarding Requirements.

5.7.3.14 Ames Laboratory Fabricated Equipment

Although not all equipment is mentioned in this program, all equipment which poses a hazard (which is not exempted) must be guarded including hydraulic, pneumatic, mechanical, gravitational, electrical, etc. See Section 5.7.3.1 of this program for guarding requirements for equipment internally manufactured by Ames Laboratory.

5.7.4 TRAINING

Detailed programmatic information is provided via the following institutional training modules:

MACHINE GUARDING TRAINING	**#AL-131**
Intended Audience:	*Mandatory for Safety Coordinators and Representatives within the scientific areas and those employees who are exposed to injury from machinery (pinch points, belts and pulleys, chains, shafts, etc.) which has not been eliminated by the use of a guard. It is suggested for Group Leaders.*
Module Format:	*Module is classroom. Module consists of slides, discussion and exam. Estimated completion time: 1.5 hours.*
Associated Retrain Period & Format:	*Five-year retrain*

Group / activity-specific machine guarding training shall be given to each employee prior to start of work. Training will include a discussion of physical hazards, safety precautions, PPE, hazard mitigation, emergency response measures, procedural information and other safety information. This training shall be documented by the Supervisor / Group Leader / Department Manager.

5.7.5 PERFORMANCE CHECKLISTS

Supervisor / Group Leaders / Department Managers shall:

- ❑ Ensure that all questions pertaining to the Machine Guarding Program are appropriately answered for each employee on the Training Needs Questionnaire and that all hazards are denoted on the Hazard Inventory.
- ❑ Attend Machine Guarding Training. Consult the Ames Laboratory/IPRT training schedule for the next available class.
- ❑ Ensure employees and contractors performing work at the facility adhere to the Machine Guarding Program.
- ❑ Inspect equipment on a periodic basis to ensure guards are in place and in proper working condition.

Employees shall:

- ❑ Attend required course as denoted on Employee Training Profile. Consult the Ames Laboratory/IPRT training schedule for the next available class.
- ❑ Fully adhere to the requirements set forth in the Machine Guarding Program.
- ❑ Shut down any equipment not properly guarded and promptly report to your Supervisor/Group Leader/Department Manager.

Environment, Safety, Health & Assurance (ESH&A) shall:

- ❑ Conduct inspections through the Annual Walk-Through Program to ensure machines are guarded properly.
- ❑ Develop and conduct Machine Guarding Training and refresher training.
- ❑ Post signs as necessary for machine guarding requirements.
- ❑ Lockout/Tagout equipment not meeting guarding requirements as necessary.

Appendix A1

Power Saw Guarding

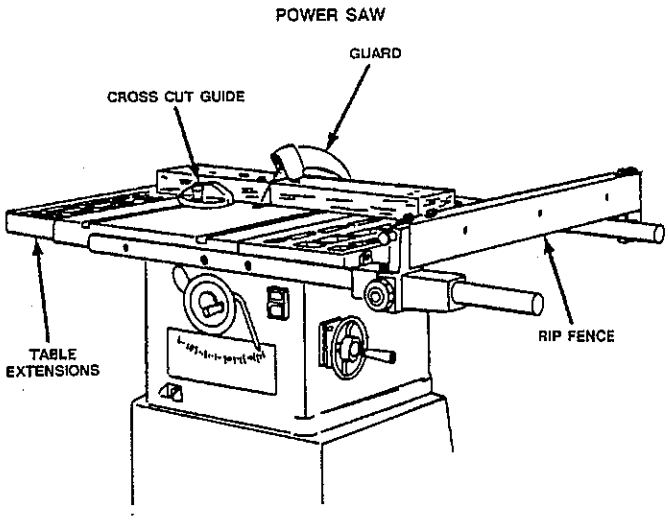

- Hood Guard over Blade
- Spreader Fingers for Rip Sawing
- Electrical Disconnect Switch Readily Available and Lockable (Unless cord & plug connected)
- Electrical Disconnect Properly Identified and Located On Machine

Appendix A2

Radial Arm Saw Guarding

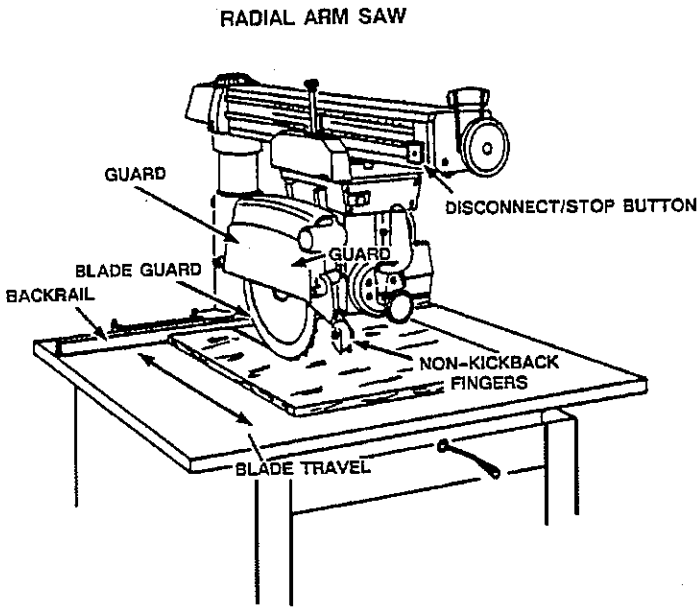

- Backrail In Place to Hold Wood
- Hooded Guard to Cover Top of Blade
- Retractable Guard On Each Side of Saw Blade
- Non-Kickback Fingers for Use When Ripping
- Stop to Prevent Forward Travel Past Table Edge
- Head Returns Automatically to Rear When Released By Operator
- Electrical Disconnect Switch Readily Available and Lockable
- Electrical Disconnect Properly Identified and Located On Machine

Appendix A3

Band Saw Guarding

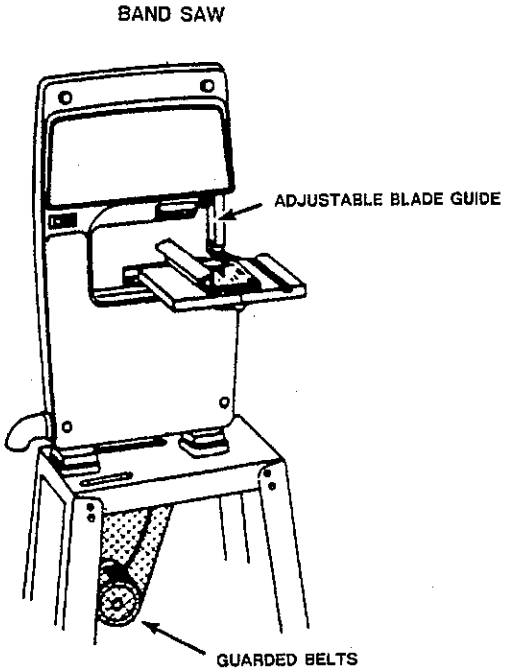

- All Belts Are To Be Guarded
- Disconnect Switch Must Be Located On Machine
- Disconnect Switch Must Be Lockable and Properly Identified
- Adjustable Blade Guard To Enclose Entire Blade Except For Material Being Cut

---

Appendix A4

Drill Press Guarding

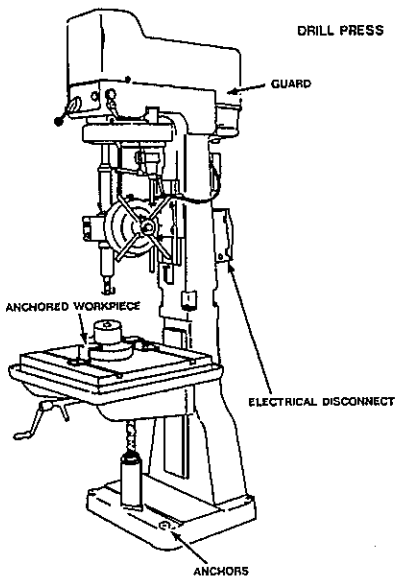

- Power Transmission System Guarded
- Electrical Disconnect Switch Readily Available and Lockable
- Electrical Disconnect Readily Identifiable and Located On Machine
- The work must be restrained/secured to prevent material rotation.

Appendix A5

Grinder Guarding

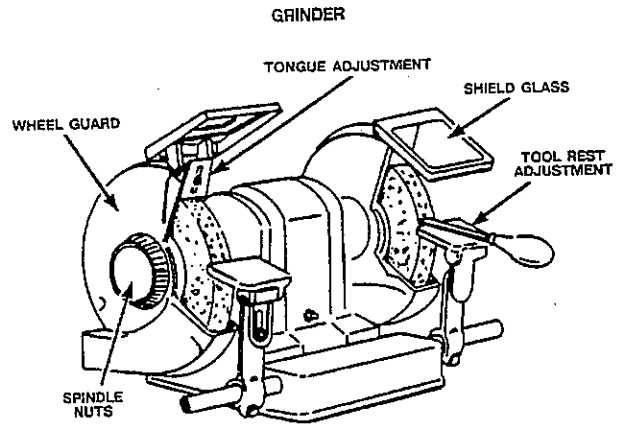

- Spindle Nuts Guarded
- Lockable Disconnect Switch
- Tongue Guard Not To Exceed 1/4 Inch Gap
- Shield Glass To Be Clean and Free of Cracks
- Wheel Guard To Cover 210 Degrees Of Wheel
- Tool Rest Adjustment Not To Exceed 1/8 Inch Gap
- Wheel Blotters To Be Used Between Wheel and Flanges
- Flanges and /or Special Nut and Flange Combinations As Designed For The Grinder Shall Be Used

---

Appendix A6

Cut Off Saw Guarding

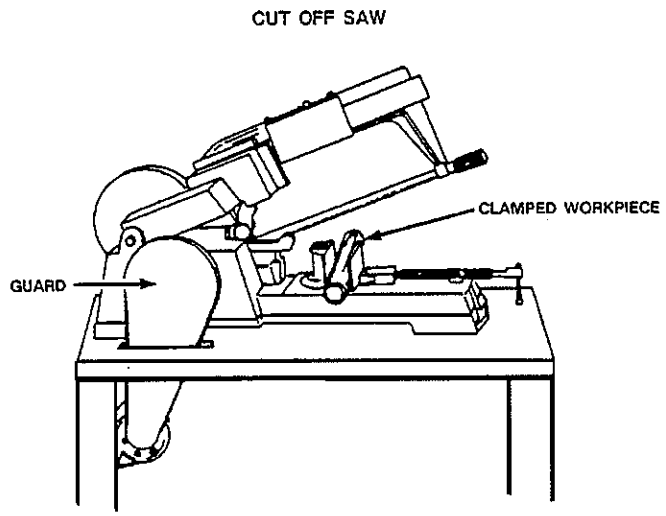

- Stock Fastening Chuck Secure
- Power Transmission System Guarded
- Unused Portion Of Blade Guarded

Appendix A7

Vertical Milling Machine

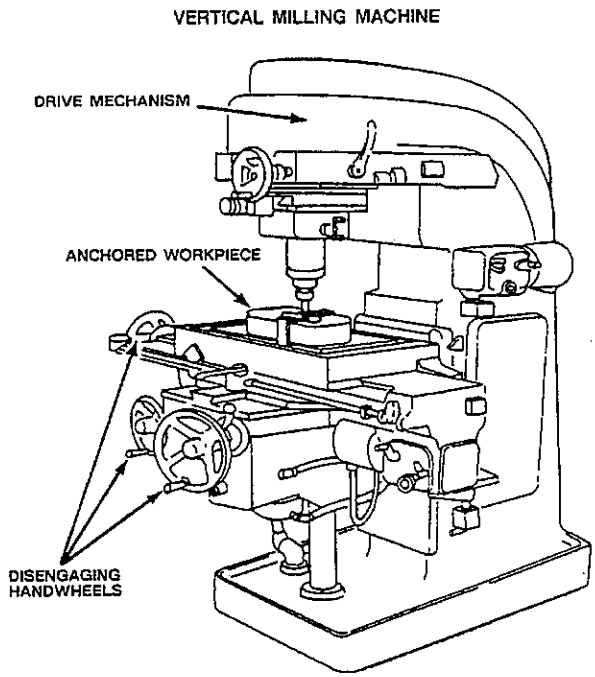

- Power Transmission System Guarded
- Electrical Disconnect Switch Readily Available and Lockable
- Electrical Disconnect Readily Identifiable and Located On Machine

---

Appendix A8

Lathe

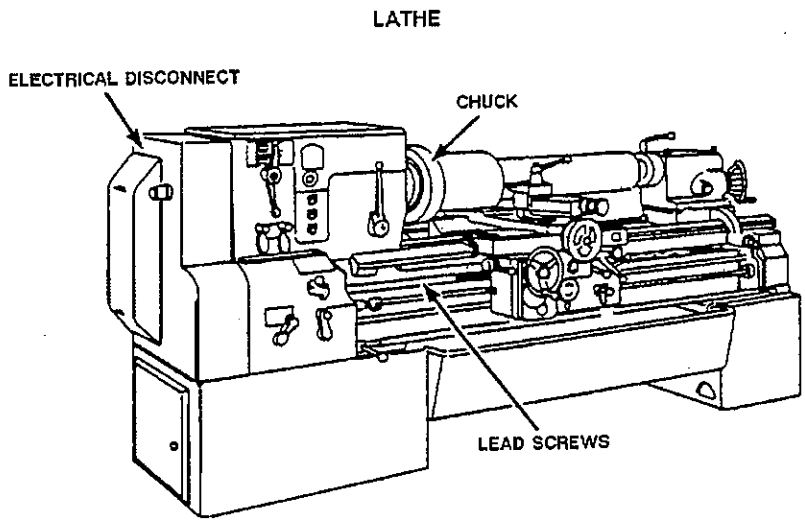

- Power Transmission System Guarded
- Electrical Disconnect Switch Readily Available and Lockable
- Electrical Disconnect Readily Identifiable and located On Machine
- Feed Rods And Lead Screws Within Envelope Of Machine
- No Protrusions On Chuck Or Faceplate Beyond Its Periphery Unless Guarded

Appendix A9

Surface Grinder

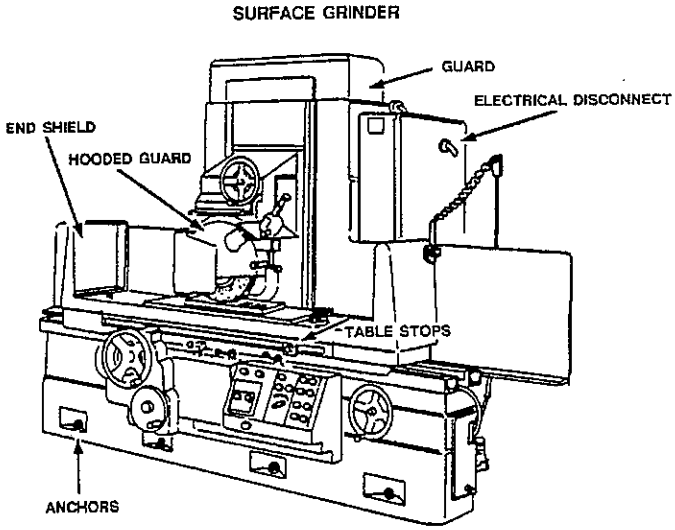

- Table Shields In Place
- Match Spindle And Wheel Speeds
- Power Transmission System Guarded
- Wheel Guarded Covered A Minimum of 210 Degrees Of Wheel
- Electrical Disconnect Switch Readily Available and Lockable
- Electrical Disconnect Readily Identifiable and located On Machine

5.8 HAND AND PORTABLE POWER TOOLS

Applicability Statement: *This section applies to all employees and contractors using hand and portable powered tools.*

5.8.1 REFERENCES

OSHA 1910.241 Hand Held and Portable Power Tools and Other Hand Held Equipment
OSHA 1910.242 Hand and Portable Power Tools and Equipment, General
OSHA 1910.243 Guarding of Portable Power Tools
OSHA 1910.244 Other Portable tools and Equipment
Manual 46200.001 Electrical Safety Manual

5.8.2 BACKGROUND

The program applies to all employees and contractors who use hand and portable power hand tools and is to provide minimum requirements for the maintenance, inspection and use.

5.8.3 PROGRAM INFORMATION

5.8.3.1 General Requirements

- Tools shall be kept in good repair, sharpened, etc.
- Hand tools shall not be painted other than by the manufacturer.
- Approved eye protection shall be worn by all employees when:
  - work may produce flying chips or debris
  - using force cutting tools
  - working overhead
- If tools are in poor condition, unsafe or do not meet regulations, the tools must be removed from service, tagged as defective and replaced immediately. All tools, including contractors tools are subject to inspection.
- Cracked saws shall be removed from service.
- Portable electric powered tools shall meet the requirements of Ames Laboratory Electrical Safety Manual.

5.8.3.2 Knives or Edged Tools

- **Knives and pointed or edged tools** shall:
  - be directed away from the body
  - not be carried in pockets but carried in sheaths or protective holders
  - be stored in a rack, tool box, or other safe location

- A **chisel** shall not be used as a pry or a wedge. Chisels with mushroomed heads shall be removed from service until repaired.

- Keep **screwdriver** blades and handles smooth, clean, and in good condition. Screwdrivers shall not be used as punches, chisels, levers or nail pullers. Only insulated screwdrivers shall be used on electrical work. Screwdrivers shall not be carried in pockets. When using a screwdriver, the material being worked on shall not be held in the hand. Screwdrivers shall only be used for the appropriate size screw.

- A **file** shall not be:
  - used without a handle on the tang
  - cleaned by striking against a vise or other metal object
  - hammered or struck by any metal object
  - used as a pry or a wedge
  - Cracked files shall be discarded

5.8.3.3 Miscellaneous Hand Tools

- Cracked heads and loose or cracked handles on **hammers** shall be replaced immediately.

- Hammers with mushroomed heads or with checked or chipped faces shall not be used.

- Hammer-heads shall fit tightly and handles shall be securely wedged. Nails shall not be used in place of a wedge. Steel or cast iron hammers shall not be used on hardened pins.

- A **wrench** that is bent, cracked, battered, or has a loose or broken handle shall not be used. A piece of pipe slipped over the handle of a wrench, or other means to gain additional leverage is not permitted.

- **Wire cutting tools (dikes)** shall be held such that flying cuttings are directed towards the floor and away from the user's body.

5.8.3.4 Guards

- All portable, power-driven circular saws having a blade diameter greater than 2 inches shall be equipped with guards above and below the base plate or shoe. The upper guard shall cover the saw to the depth of the teeth, except for the minimum arc required to permit the base to be tilted for bevel cuts. The lower guard shall cover the saw to the depth of the teeth, except for the minimum arc required to allow proper retraction and contact with the work. When the tool is withdrawn from the work, the lower guard shall automatically and instantly return to covering position.

- Right angle grinders shall have minimum exposure angle of 180 degrees and the guard shall be so located so as to be between the operator and the wheel during use.

- A physical barrier must be in place between an operator and passers-by for hazards generated as a result of hand tools, powered tools and compressed air.

- Guards may not be removed during any operation. Guards shall prevent access to the danger area from the top, front, sides, bottom and back.

- If equipment has been purchased without the required guarding or the guarding has been removed, the equipment must be locked out of service (see Section 5.12), made inoperable or removed from the premises until guarding is provided.

5.8.4 TRAINING

Currently, there is no institutional training module for the Hand and Portable Power Tools. However, all affected populations are required to read this program and comply with the requirements discussed in this section.

Group / activity-specific hand and portable power tool training shall be given to each employee prior to start of work. The training will include a discussion of physical hazards, proper use of tools, hazard mitigation, emergency response measures and inspection. This training shall be documented by the supervisor.

5.8.5 PERFORMANCE CHECKLISTS

Supervisors / Group Leaders / Department Managers shall:

- ❑ Ensure that all questions pertaining to the Hand and Portable Power Tools Program are appropriately answered for each employee on the Training Needs Questionnaire and that all hazards are denoted on the Hazard Inventory.
- ❑ Ensure employees and contractors performing work at the facility adhere to the Hand and Portable Power Tool Program.
- ❑ Ensure employees and contractors performing work at the facility adhere to the Hand and Portable Power Tools Program.

Employees shall:

- ❑ Attend required course as denoted on Employee Training Profile. Consult the Ames Laboratory/IPRT training schedule for the next available class.
- ❑ Inspect tools and equipment prior to every use.
- ❑ Fully adhere to the requirements set forth in the Personal Protective Equipment Program (see Section 5.6 of this manual).

Environment, Safety, Health & Assurance (ESH&A) shall:

- ❑ Conduct inspections through the annual Walk-Through Program to ensure hand tools and portable power tools guarded properly.
- ❑ Develop and conduct Hand and Portable Power Tool Training and refresher training.
- ❑ Investigate any accidents involving hand and portable power tools.

5.9 COMPRESSED AIR

Applicability Statement: *This section applies to all employees and contractors using compressed air.*

5.9.1 REFERENCES

OSHA 1910.169 Air Receivers
OSHA 1910.242(b) Compressed Air Used For Cleaning
ISU EH&S Gas Cylinder Safety Guidelines
Manual 10200.002 ESH&A Program Manual, Compressed / Liquefied Gases, Section 4.3

5.9.2 BACKGROUND

This program applies to all employees who use compressed air and is to provide minimum requirements for the maintenance, inspection and use of compressed air.

5.9.3 PROGRAM INFORMATION

5.9.3.1 Compressed Air Receiver Rules

- Position all drains, hand-holes, and manholes on all air receivers in easily accessible locations.

- Install a drain pipe and valve at the lowest point of the air receiver to remove accumulated oil and water.

NOTE: The drain pipe and valve must vent internally to buildings or have a receiving vessel of sufficient size to prevent spills of accumulated oil and water to the outside.

- Open the valve and drain frequently to avoid oil and water buildup. Do not drain oil and water to the ground or any other area outside.

- Verify that filters for the removal of oil and water from the air line will function efficiently at the maximum anticipated air flow and maximum degree of contamination in the line.

- Install easy to read gauges on air receivers.

- All compressed air receivers must have one or more spring-loaded safety relief valves providing a total pressure relief that keeps pressure in the receiver from exceeding the maximum rated pressure by 10 percent.

- Do not place a valve in line between the air receiver and its safety relief valve(s). The safety relief valve must be between air receiver and the valve(s).

- Safety relief valves, indicating devices, and controlling devices must be tamper-proof and weather proof.

- All air receivers must be constructed according to the ASME Boiler and Pressure Vessel Code, Section VIII, 1968 edition or later, as long as the later edition meets or exceeds the requirements of the 1968 edition. (See Engineering Services Group for guidance).

- Air receivers may not be buried underground or located in an in-accessible area.

5.9.3.2 Air Compressor Receiver Hose and Attachment Maintenance

- Test each safety relief valve to make sure it will operate properly at pressures at least 10 percent greater than the maximum operating pressure of the machine it is installed on.

- Test all other valves to ensure proper function at maximum rated pressure.

- Inspect valve fittings and hose attachments for signs of corrosion and wear.

- Inspect air lines for cracking, bulging, or other signs of weakness and wear.

- Destroy and discard hoses that are worn, cracked, or show other signs of exposure or aging.

- Remove from service and repair/replace all attachments that do not pass inspection.

5.9.3.3 Cleaning with Compressed Air

- Compressed air shall not be used for cleaning purposes except where the pressure is reduced to less than 30 p.s.i. and then only with effective chip guarding and personal protective equipment.

- Use personal protective equipment (safety glasses, face shield, long sleeve shirt, gloves, etc.) when operating the air hose.

- Never direct air under pressure toward yourself or another person.

5.9.4 TRAINING

Detailed programmatic information is provided via the following institutional training modules:

COMPRESSED AIR SAFETY	**#AL-161**
Intended Audience:	*Mandatory for Facilities Services Crafts Workers and Engineering Services Machinists*
Module Format:	*Classroom Instruction. Estimated completion time: 1.0 Hour*
Associated Retrain Period & Format:	*No retrain*

Group / activity-specific training on compressed gas usage shall be given to each employee prior to work that includes a discussion of specific hazards, hazard mitigation, equipment operation, location of MSDSs and other safety information, emergency response measures and any other procedural information. This training shall be documented by the Group Leader / Department Manager and the records maintained for a period of five years.

5.9.5 PERFORMANCE CHECKLISTS

Supervisors / Group Leaders / Department Managers shall:

- ❑ Ensure that all questions pertaining to the Compressed Air Program are appropriately answered for each employee on the Training Needs Questionnaire and that all hazards are denoted on the Hazard Inventory.
- ❑ Consult the Ames Laboratory/IPRT training schedule for the next available class.
- ❑ Ensure employees and contractors performing work at the facility adhere to the Compressed Air Program.

Employees shall:

- ❑ Attend required course as denoted on Employee Training Profile. Consult the Ames Laboratory/IPRT training schedule for the next available class.
- ❑ Fully adhere to the requirements set forth in the Compressed Air Program.
- ❑ Attend "Compressed Air Safety", (AL-161) training.

Environment, Safety, Health & Assurance (ESH&A) shall:

- ❑ Conduct inspections through the Annual Walk-Through Program to ensure air nozzles are equipped with either chip shields or safety relief devices.
- ❑ Develop and conduct Compressed Air training and refresher training.

5.10 WELDING, CUTTING AND BRAZING PROGRAM

Applicability Statement: *This section applies to all employees and contractors using welding, cutting, brazing and other open-flame equipment.*

5.10.1 REFERENCES

ANSI B57.1-1965 Standard Compressed Gas Cylinder Valve Outlet and Inlet Connections, which is incorporated by reference as specified in Sec. 1910.6
ANSI Z49.1-1967 Safety in Welding and Cutting published by the American Welding Society
ANSI Z87.1-1968 Standard Practice for Occupational and Educational Eye and Face Protection, which is incorporated by reference as specified in Sec. 1910.6. (b)(2)(iii)
OSHA 1910.251 Welding, Cutting and Brazing Program
OSHA 1910.252 General Requirements
OSHA 1910.253 Oxygen-Fuel Gas Welding and Cutting
OSHA 1910.254 Arc Welding and Cutting
OSHA 1910.255 Resistance Welding
NFPA 51 Design and Installation of Oxygen-Fuel Gas Systems for Welding, Cutting and Allied Processes
NFPA 51B Standard for Fire Prevention in Use of Cutting & Welding Processes
Section 8 Fire Protection of ESH&A Program Manual
Procedure 46200.001 Welding Program (Engineering Services Group)
Procedure 46300.001 Welding Program (Facilities Services Group)
ISU Chemical Hygiene Plan

5.10.2 BACKGROUND

The program applies to all employees who perform welding, cutting and brazing.

5.10.3 PROGRAM INFORMATION

5.10.3.1 Fire Prevention and Protection for Welding, Cutting and Brazing

- If the object to be welded or cut cannot be moved and if all the fire hazards cannot be removed, then guards shall be used to confine the heat, sparks, and slag, and to protect the immovable fire hazards.

- If the welding or cutting cannot be performed in a safe location or the flammable/combustible materials cannot be relocated or guarded, then welding and cutting shall not be performed.

- Wherever there are floor openings or cracks in the flooring that cannot be closed, precautions shall be taken so that no readily combustible materials on the floor below will be exposed to sparks which might drop through the floor. The same precautions shall be observed with regard to cracks or holes in walls, open doorways and open or broken windows.

- Suitable fire extinguishing equipment shall be maintained in a state of readiness for instant use. Such equipment may consist of pails of water, buckets of sand, hose or portable extinguishers depending upon the nature and quantity of the combustible material exposed.

- Fire watchers shall be required whenever welding or cutting is performed in locations where other than a minor fire might develop, or any of the following conditions exist:

  - Appreciable combustible material closer than 35 feet to the point of operation must be relocated,
  - Flame-proofed covers are used to eliminate the potential for fires, and
  - Materials are otherwise shielded with metal or guards or welding curtains.

- Fire watchers shall have fire extinguishing equipment readily available and be trained in its use. They shall be familiar with methods for sounding an alarm in the event of a fire. They shall watch for fires in all exposed areas, try to extinguish them only when obviously within the capacity of the equipment available, or otherwise sound the alarm. A fire watch should be maintained for at least a half-hour after completion of welding or cutting operations to detect and extinguish possible smoldering fires. See Section Fire Protection Program of this manual for additional information.

- Before cutting or welding is permitted, the area shall be inspected by the individual responsible for authorizing cutting and welding operations. He/she shall designate precautions to be followed in granting authorization to proceed in the form of a written permit.

- Cutting or welding shall not be permitted in the following situations:
  - In areas not authorized by management.
  - In sprinklered buildings while such protection is impaired.
  - In the presence of explosive atmospheres (mixtures of flammable gases, vapors, liquids, or dusts with air), or explosive atmospheres that may develop inside uncleaned or improperly prepared tanks or equipment which have previously contained such materials, or that may develop in areas with an accumulation of combustible dusts.

- No welding, cutting, or other hot work shall be performed on used drums, barrels, tanks or other containers until they have been cleaned so thoroughly as to make absolutely certain that there are no flammable materials present. Any substances such as greases, tars, acids, or other materials which, when subjected to heat, might produce flammable or toxic vapors must also be removed. Any pipe lines or connections to the drum or vessel shall be disconnected or blanked.

- Personal Protective Equipment shall include:
  - Eye protection.
  - Helmets or hand shields shall be used during all arc welding or arc cutting operations.
  - Helpers or attendants shall be provided with proper eye protection.
  - Goggles or other suitable eye protection shall be used during all gas welding or oxygen cutting.
  - All filter lenses and plates shall meet the test for transmission of radiant energy prescribed in ANSI Z87.1-1968 - American National Standard Practice for Occupational and Educational Eye and Face Protection, which is incorporated by reference as specified in Sec. 1910.6. (b)(2)(iii).
  - Apron, sleeves and gloves as necessary depending on the type of welding and duration of welding to be performed.

- To eliminate the possibility of gas escaping through leaks of improperly closed valves, the torch valves shall be closed and the fuel-gas and oxygen supply to the torch positively shut off whenever the torch is not in use for a substantial period of time (i.e., over the weekend).

- Welding may produce fumes and gases hazardous to health. Avoid breathing these fumes and gases. Use adequate ventilation. See ANSI Z49.1-1967 Safety in Welding and Cutting published by the American Welding Society. Contact ESH&A with questions pertaining to specific metals to be welded, cut or brazed.

5.10.3.2 Requirements for Oxygen and Fuel Gases

- Compressed gas cylinders shall be legibly marked, for the purpose of identifying the gas content, with either the chemical or the trade name of the gas. Such marking shall be by means of stenciling, stamping, or labeling, and shall not be removable.

- Compressed gas cylinders shall be equipped with connections complying with the American National Standard Compressed Gas Cylinder Valve Outlet and Inlet Connections, ANSI B57.1-1965, which is incorporated by reference as specified in Sec. 1910.6.

- All cylinders with a water weight capacity of over 30 pounds (13.6 kg) shall be equipped with means of connecting a valve protection cap or with a collar or recess to protect the valve.

- Backflow protection shall be installed by an approved device that will prevent oxygen from flowing into the fuel gas or from fuel gas from flowing into the oxygen.

- Approved flashback protection shall be installed that will prevent flame from passing into the fuel gas cylinder.

5.10.3.3 General Storage of Cylinders

- Cylinders shall be kept away from radiators and other sources of heat.
- Cylinders inside of buildings shall be stored in a well-protected, well-ventilated, dry location at least 20 (6.1 m) feet from highly combustible materials such as oil or excelsior. Cylinders should be stored in definitely assigned places away from elevators, stairs, or gangways.
- Assigned storage spaces shall be located where cylinders will not be knocked over or damaged by passing or falling objects, or subject to tampering by unauthorized persons.
- Empty cylinders shall have their valves closed.
- Acetylene cylinders shall be stored valve end up.
- Oxygen cylinders in storage shall be separated from fuel-gas cylinders or combustible materials (especially oil or grease), a minimum distance of 20 feet or by a noncombustible barrier at least 5 feet high having a fire-resistance rating of at least one-half hour.

5.10.3.4 Requirements for Operating Procedures

- Cylinders, cylinder valves, couplings, regulators, hose, and apparatus shall be kept free from oily or greasy substances. Oxygen cylinders or apparatus shall not be handled with oily hands or gloves. A jet of oxygen must never be permitted to strike an oily surface, greasy clothes, or enter a fuel oil or other storage tank.
- Cylinders shall not be dropped or struck or permitted to strike each other violently.
- Valve protection caps shall not be used for lifting cylinders from one vertical position to another.
- Bars shall not be used under valves or valve-protection caps to pry cylinders loose when frozen to the ground or otherwise fixed. The use of warm (not boiling) water is recommended. Valve protection caps are designed to protect cylinder valves from damage.
- Cylinder valves shall be closed before moving cylinders.
- Cylinder valves shall be closed when work is finished.
- No person, other than the gas supplier, shall attempt to mix gases in a cylinder. No one, except the owner of the cylinder or person authorized by him, shall refill a cylinder.
- Unless connected to a manifold, oxygen from a cylinder shall not be used without first attaching an oxygen regulator to the cylinder valve. Before connecting the regulator to the cylinder valve, the valve shall be opened slightly for an instant and then closed to purge dust/debris so as not to enter the manifold. Always stand to one side of the outlet when opening the cylinder valve.

5.10.4 TRAINING

Detailed programmatic information is provided via the following institutional training modules:

Welding Safety and Hot Work	**#AL-149**
Intended Audience:	*Mandatory for Ames Laboratory individuals who perform electric or gas welding and cutting.*
Module Format:	*Classroom Instruction with video. Estimated completion time: 1 Hour*
Associated Retrain Period & Format:	*Three-year retrain. Retrain module consists of Classroom and video.*

5.10.5 PERFORMANCE CHECKLISTS

Supervisors / Group Leaders / Department Managers shall:

- ❑ Ensure that all questions pertaining to the Welding, Cutting and Brazing Program are appropriately answered for each employee on the Training Needs Questionnaire and that all hazards are denoted on the Hazard Inventory.
- ❑ Consult the Ames Laboratory/IPRT training schedule for the next available class.
- ❑ Ensure employees and contractors performing work at the facility adhere to the Welding, Cutting and Brazing Program.

Employees shall:

- ❑ Attend required course as denoted on Employee Training Profile. Consult the Ames Laboratory/IPRT training schedule for the next available class.
- ❑ Fully adhere to the requirements set forth in the Personal Protective Equipment Program.
- ❑ Taking necessary precautions outlined in this program.
- ❑ Locating a Fire Watch as outlined in this program (trained in the use of a fire extinguisher).

Fire Watch shall:

- ❑ Check that fire extinguisher equipment is readily available (must be trained in the use of a fire extinguisher).
- ❑ Know how to sound the alarm and summon the Fire Department and the Emergency response Team.
- ❑ Watch for fires, smoke, or sparks or other conditions indicating the onset of a fire in all exposed areas and try to extinguish them.
- ❑ Be aware of capacity of fire fighting equipment, otherwise sound the alarm immediately and evacuate.
- ❑ Remain on the site of the hot work for a minimum of ½ hour after the completion of cutting, welding, etc. to detect smoldering fires.

Environment, Safety, Health & Assurance (ESH&A) shall:

- ❑ Conduct inspections through the annual Walk-Through Program.
- ❑ Investigate all accidents.
- ❑ Ensure program remains current with applicable federal, state and local regulations.
- ❑ Periodically review and update this program.

Contractors shall:

- ❑ Comply with all ESH&A Programs.
- ❑ Failure to comply with ESH&A Programs may subject the contractor and contract company to immediate discharge.

5.11 ELECTRICAL SAFETY & ELECTRICAL RELATED WORK PRACTICES

Applicability Statement: *This section applies to all employees and contractors who face a risk of electrical shock that is not reduced to a safe level by the electrical installation requirements set forth in OSHA 1910.303 through 1910.308.*

5.11.1 REFERENCES

OSHA 1910.145 Specifications for Accident Prevention, Signs and Tags
OSHA 1910.301 Electrical
OSHA 1910.302 Electric Utilization Systems
OSHA 1910.303 General Requirements
OSHA1910.304 Wiring Design and Protection
OSHA 1910.305 Wiring Methods, Components and Equipment for General Use
OSHA 1910.306 Specific Purpose Equipment and Installations
OSHA 1910.307 Hazardous (classified) Locations
OSHA 1910.331 Scope of Electrical Program for both Qualified and Unqualified Persons
OSHA 1910.332 Training
OSHA 1910.333 Selection and Use of Work Practices
OSHA 1910.334 Use of Equipment
OSHA 1910.335 Safeguards for Personal Protection
Manual 46200.001 Electrical Safety Manual
Manual 10200.002 ESH&A Program Manual, Control of Hazardous Energy (Lockout/Tagout), Section 5.12
NFPA 70, National Electric Code
NFPA 70E, Standard for Electrical Safety in the Workplace.

5.11.2 BACKGROUND

Many standards make up the requirements to meet compliance and safety with electrical work. In an effort to outline all of those requirements, Ames Laboratory has developed an Electrical Safety Manual. The manual is distribution to a select list but it available to all on the Ames Laboratory Web Site (http://www.external.ameslab.gov/esha/ESH&A_Documents/Manuallist.html). The Electrical Safety Manual is the main reference for guidance.

Lockout / Tagout for all energy sources (electrical, pneumatic, hydraulic, gravitational, steam, etc.) is referenced in Section 5.12 Control of Hazardous Energy (Lockout / Tagout) of this Manual.

The purpose of the Electrical Safety Manual is to outline work requirements for both qualified persons (those who have training in avoiding the electrical hazards of working on or near exposed parts) and unqualified persons (those with little or no such training) working on, near or with the following installations:

1) premises wiring;
2) wiring for connection to supply;
3) other wiring; and
4) optical fiber cables.

5.11.3 PROGRAM INFORMATION

5.11.3.1 Definitions:

Dangerous Voltage: 50 Volts and greater

High Voltage: 600 Volts and greater

Qualified Persons: Those persons trained and familiar with:

- The skills and techniques necessary to distinguish exposed live parts from other parts of electrical equipment.
- The skills and techniques necessary to determine the nominal voltage of exposed live parts.
- The clearance distances specified in 1910.333(c) and the corresponding voltages to which the qualified person will be exposed.

Extension Cord: Cords and plug-in strips intended for temporary use (less than 90 days).

5.11.3.2 General Electrical Safety Requirements

- No Live (energized) work over 50 volts is permitted unless written approval is granted by either the Chief Operations Officer or the Director for Science and Technology.

- Portable ladders shall have nonconductive side rails if they are used where the employee or the ladder could contact exposed energized parts. (See Section 5.15 Ladder Safety and Maintenance.)

- Conductive articles of jewelry and clothing (such as watch bands, bracelets, rings, key chains, necklaces, aprons with metal eyelets, etc.) may not be worn if exposed to energized metal parts of equipment and circuits.

- Only a qualified employee following the requirements of Paragraph 5.11.3.5 Working On or Near Energized Parts, may defeat an electrical safety interlock, and then it shall be returned to its operable condition when work is complete.

- Adapters (two prong cheaters) that interrupt the continuity of the grounding connection shall not be used.

- Ground Fault Circuit Interrupters (GFCI's) shall be used in wet and damp locations.

- Employees hands shall not be wet when plugging and unplugging flexible cords and plug connected equipment.

- Routine opening and closing of switches, circuit breakers or other devices shall mandate use of equipment specifically designed and labeled as SWD (switching device / switch rated).

- Where flammable materials are present, electrical equipment capable of igniting them shall not be used unless measures are taken to prevent hazardous conditions from developing.

- Safety signs, tags and symbols shall be used where necessary to warn employees about electrical hazards which may endanger them as required by 29 CFR 1910.145. (Signs available upon request from ESH&A)

- Barricades shall be used in conjunction with safety signs where it is necessary to prevent or limit employee access to work areas 9Prohibited Approach Boundary). If signs and barricades do not provide sufficient warning and protection from electrical hazards, an attendant shall be stationed to warn and protect employees.

- Live parts to which an employee may be exposed shall be de-energized before the employee works on or near them. If an employee can demonstrate that de-energizing introduces additional or increased hazards or is not feasible due to equipment design or operational limitations, work on live equipment is permitted, however other safety related work practices (including permit Approval by the Chief Operations Officer or the Director for Science and Technology) shall be used to protect employees who may be exposed to the electrical hazards involved.

NOTE: Examples of increased or additional hazards include interruption of life support equipment, deactivation of emergency alarm systems or shut down of hazardous location ventilation equipment. The severity of increased hazard or being infeasible justifies <u>not de-energizing</u> equipment or machinery, not personal convenience.

- Safety Related Work Practices for working on energized electrical equipment include:

  - Being familiar with the proper use of special precautionary techniques
  - Personal Protective Equipment
  - Insulating and shielding materials
  - Insulating tools

- The use of Personal Protective Equipment **<u>does apply</u>** to taking voltage measurements with approved equipment.

- Live parts that operate at less than 50 volts to ground need not be de-energized if there will be no increased exposure to electrical burns or to explosion due to electric arcs.

- The work practices that are used shall be suitable for the conditions under which the work is to be performed and for the voltage level of the exposed electrical conductors or circuit parts (NFPA 70E).

5.11.3.3 Personal Protective Equipment (PPE)

- Employees working in areas where there are potential electrical hazards shall be provided with and shall use electrical protective equipment that is appropriate for the specific parts of the body to be protected (i.e., electrical gloves, electrical sleeves, electrical mats, insulated tools, etc.).

- Protective shields, protective barriers, insulating mats and materials shall be used to protect each employee from shock, burns or other electrically related injuries while that employee is working near exposed energized parts which might be accidentally contacted.

- PPE shall be maintained in a safe, reliable condition and shall be maintained or tested as required.

- If the insulating capability of protective equipment (i.e. electrical rated rubber gloves) may be subject to damage during use, the insulating material shall be protected by additional materials such as leather gloves.

- Employees shall wear protective equipment for the eyes or face wherever there is danger of injury from electric arcs or flashes or from flying objects resulting from electrical explosions.

- Employees shall use insulated tools.

5.11.3.4 Working On or Near Exposed De-Energized Parts

- Conductors and parts of electrical equipment that have been de-energized but have not been locked out or tagged shall be treated as energized parts.

- Stored electrical energy which might endanger personnel shall be released. Capacitors shall be discharged and high capacitance elements shall be short circuited and grounded if the stored electrical energy might endanger employees.

- While any employee is exposed to contact with parts of fixed electrical equipment or circuits which have been de-energized, the circuits energizing the parts shall be locked out. Locks and tags shall be placed on each disconnecting means (multiple energy source equipment) used to de-energize circuits and equipment on which work is to be performed. The lock shall be attached so as to prevent persons from operating disconnecting mean unless they resort to undue force or the use of tools which is means for immediate disciplinary action. (See Section 5.12 of the ESH&A Program Manual for Control of Hazardous Energy (Lockout/Tagout) for program details.

NOTE: Lockout/Tagout does not apply to cord and plug connected equipment and tools as long as the male end of the cord is in constant control and sight of the employee

servicing the equipment. (See Section #5.12 Control of Hazardous Energy (Lockout/Tagout) for lockout/tagout program details.)

- Safe procedures for de-energizing circuits and equipment shall be determined before circuits or equipment is de-energized.

- Verification of de-energization is necessary before any circuits or equipment can be considered and worked on as de-energized. See Section 5.12 Control of Hazardous Energy (Lockout/Tagout) for program details.

- Locks shall only be removed by the employee who applied them. If this employee is absent from the workplace, then the lock may be removed by a qualified employee authorized to perform this task provided that:

  a. The employee who applied the lock or tag is not available at the workplace and attempts to contact the employee have failed.
  b. The employee is made aware that the lock or tag has been removed before he or she resumes work.
  c. It was absolutely necessary to remove the lock.
  d. ESH&A is notified in advance that the lock is to be removed and the circumstances for removal.

5.11.3.5 Working On or Near Energized Parts

- Only qualified employees may work on electric circuits or equipment that <u>has not been de-energized</u>. Such employees shall be capable of working safely on energized circuits and shall be familiar with the proper use of:

  - Special Precautionary Techniques
  - Personal Protective Equipment
  - Insulating and Shielding Materials
  - Insulating Tools

Detailed information on Electrical Safety and Electrical Related Safe Work Practices is conveyed via the Ames Laboratory Electrical Safety Manual.

5.11.4 TRAINING

Detailed programmatic information is provided via the following institutional training modules:

RESEACHER ELECTRICAL SAFETY	**#AL-191**
Intended Audience:	*Mandatory for Ames Laboratory researchers that work with electrical equipment in a research setting*
Module Format:	*Classroom Instruction with quiz. Estimated completion time: 1 hour.*
Associated Retrain Period & Format:	*Three-year retrain.*

BASIC ELECTRICAL SAFETY, < 600 Volts	**#AL-019**
Intended Audience:	*Mandatory for Ames Laboratory individuals working on or near exposed electrical parts less than 600Volts.*
Module Format:	*Classroom Instruction with quiz. Estimated completion time: 4 hour.*
Associated Retrain Period & Format:	*Three-year retrain. Retrain module consists of Computer Based Training and exam.*

HIGH VOLTAGE ELECTRICAL SAFETY, > 600 Volts	**#AL-020**
Intended Audience:	*Mandatory for personnel who work with 600 Volts or more as a function of their job must utilize safe work practices, special tools, test equipment to become a Qualified Electrical Workers as defined by Ames Laboratory.*
Module Format:	*Classroom Instruction with quiz. Estimated completion time: 1.5 hours.*
Associated Retrain Period & Format:	*Three-year retrain. Retrain module consists of classroom/video and exam.*

SAFE EQUIPMENT WIRING	**#AL-063**
Intended Audience:	*For individuals performing 120 volt plug wiring, electrical equipment construction and electrical power wiring.*
Module Format:	*Classroom Instruction with quiz. Estimated completion time: 1.5 hours.*
Associated Retrain Period & Format:	*Three-year retrain. Retrain module consists of classroom and exam.*

LOCKOUT TAGOUT TRAINING	**#AL-012**
Intended Audience:	*Mandatory for all workers whose job assignments involve activities such as servicing or maintenance of machines or equipment which may have unexpected energizing, startup, or release of stored energy (pneumatic, hydraulic, springs, gravity, etc.).*
NOTE:	*Employees performing **ONLY** electrical LOTO do not need to attend this module if they have completed the Basic Electrical Safety Training Module (AL-019).*
Module Format:	*Module is Classroom discussion with video, handouts and exam. Estimated completion time: 1.0 hours.*
Associated Retrain Period & Format:	*Two year retrain: Retrain module consists of classroom discussion with video, handouts and exam.*

5.11.5 PERFORMANCE CHECKLISTS

Supervisors / Group Leaders /Department Managers shall:

- ❑ Ensure that all questions pertaining to the Electrical Safety and Electrical-Related Work Practices Program are appropriately answered for each employee on the Training Needs Questionnaire and that all hazards are denoted on the Hazard Inventory.
- ❑ Ensure outside contractors performing work at the facility adhere to the Electrical Safety and Electrical-Related Work Practices Program.
- ❑ Initiates progressive discipline when authorized employees fail to comply with the Electrical Safety and Electrical-Related Work Practices Program.
- ❑ Ensure new and present employees attend initial and refresher training.

Employees shall:

- ❑ Attend required course as denoted on Employee Training Profile. Consult the Ames Laboratory/IPRT training schedule for the next available class.
- ❑ Comply with the requirements of this program.
- ❑ Inspect electrical equipment regularly.

Environment, Safety, Health & Assurance (ESH&A) shall:

- ❑ Periodically review and update the program requirements according to changes in regulations.
- ❑ Inspect electrical equipment annually during the Independent Walk-Throughs.
- ❑ Stop work for installations found to be unsafe.

Engineering Services Group shall:

- ❑ Conduct Basic Electrical Safety Training, High Voltage Electrical Safety Training and Safe Equipment Wiring Training.

Contractors shall:

- ❑ Comply with:
  - Ames Laboratory Electrical Safety Program
  - Electrical-Related Work Practices Program
  - Lockout Tagout Program

5.12 LOCKOUT TAGOUT PROGRAM

Applicability Statement: *This section applies to all employees and contractors performing servicing or maintenance activities with machines or equipment.*

5.12.1 REFERENCES

OSHA 1910.147 The Control of Hazardous Energy (Lockout/Tagout)
Form 10200.099 Appendix A, Authorized Employee LOTO Annual Certification

5.12.2 BACKGROUND

The purpose of the Control of Hazardous Energy Program (commonly referred to as the Lockout/Tagout Program) is to prevent injuries to employees and contractors from the unexpected energizing, startup, or release of stored energy from machines, equipment or processes. The Lockout/Tagout program establishes minimum performance requirements for the control of hazards.

It is limited in scope to activities related only to controlling hazardous energy in machinery and equipment. For example, applications would include, but not limited to the service and maintenance of:

Electrical	Mechanical	Hydraulic
Pneumatic	Steam	Capacitors
Gravitational	Chemical	Etc.

5.12.3 PROGRAM INFORMATION

5.12.3.1 Definitions:

Affected Personnel: An unqualified person whose job requires that they operate or use a machine or piece of equipment on which servicing or maintenance is being performed under lockout/tagout, or whose job requires them to work in an area in which such servicing or maintenance is being performed.

Authorized Personnel: A qualified person to whom authority and responsibility to perform a specific lockout and/or tagout assignment has been given by the employer.

Energized: Connection of an energy source (mechanical, electrical, hydraulic, pneumatic, etc.) which has not been isolated.

Energy Isolating Device: A device that physically prevents the transmission or release of energy. This includes manually operated electrical circuit breakers, a disconnect switch, a manually operated switch, a slide gate, a line valve, a blank, and buttons, selector switches and other control circuit-type devices.

Energy Source: Any electrical, mechanical, hydraulic, pneumatic, chemical, thermal, or other energy source that is capable of causing injury to personnel.

Hot Tap: A procedure used in repair, maintenance, and service activities which involves welding a piece of equipment (pipelines, vessels, or tanks) under pressure, in order to install connections. It is commonly used to replace or add sections of pipeline without the interruption of service for air, gas, water, and steam.

Lockout Device: A device that utilizes a lock and key to hold an energy isolating device in a safe position.

Lockout / Tagout: The placement of a lock and a tag on the energy isolating device in accordance with an established procedure indicating that the energy isolating device or the equipment being controlled shall not be operated until removal of the lock and/or tag.

Servicing and Maintenance: Functions that include workplace activities such as installing, constructing, adjusting, setting up, inspecting, maintaining, or repairing machines and equipment.

5.12.3.2 Applications Requiring Lockout/Tagout

- This standard applies to the control of energy during servicing and/or maintenance of machines and equipment.

- The program applies to but not limited to:
  - Maintenance Activities
  - Electronic Technicians
  - Production Mechanics
  - Production Engineers
  - Service Technicians
  - All employees including scientists, graduate students and other professionals whose work exposes them to equipment which is capable of causing injury.

- Minor tool changes and adjustments, and other minor servicing activities, which take place during normal production operations, are not covered by this program provided that minor tool changes are routine, repetitive, and integral to the use of the equipment for production. (Example: *Changing tools in a milling machine or drill press.)*

- Normally exempt servicing and/or maintenance of production equipment requires Lockout/Tagout if:

  - An employee is required to remove or bypass a guard or other safety device or
  - An employee is required to place any part of his or her body into an area on a machine or piece of equipment where work is actually performed upon the material being processed (point of operation) or where an associated danger zone exists during a machine operating cycle.

- Examples of equipment and machinery which have the potential for unexpected energization, startup or release of stored energy include but are not limited to the servicing and maintenance of:

motors	pumps	air compressors	lighting
elevators	refrigeration	compactors	machine shop equipment
boilers	piping	valves	air conditioning equipment
fans	welders	switch gears	transformers

- The Lockout / Tagout Program does not apply to work on electrical equipment for which exposure to the hazards can be controlled by unplugging the equipment from the receptacle provided the cord end remains under the control of the person performing service or maintenance. If equipment is going to be impaired over time due to ordering parts, shift is over, etc., then the equipment should be locked and tagged to prevent someone from trying to energize the equipment unknowing that the equipment is impaired.

5.12.3.3 Lockout/Tagout Procedure

The following are the established procedures for application of energy control and Lockout/Tagout.

Step	Action
1.	Before proceeding with any equipment shutdown, a survey will be made to locate and identify all energy isolating devices feeding the equipment (i.e., electrical circuit breakers, shut-off valves, electrical disconnect switches, etc.).
2.	Once the survey is complete, the authorized personnel will notify all affected personnel, including the area supervisor that a shutdown of the equipment or machine will occur.
3.	Following notification, the equipment or machine (if operating) will be shut down by normal stopping procedure (i.e., depress stop button, open toggle switch, turn light switch off, etc.).
4.	Once turned off, the energy isolating device (i.e., circuit breaker, disconnect switch, valve, etc.) will be operated in such a manner that the machine or equipment will be isolated from the energy source (electrical, mechanical, hydraulic, pneumatic, chemical, thermal, etc.).
5.	The energy-isolating device is then "locked out" by applying the padlock and tag to the device. In some cases, a chain must be used (in combination with a padlock) to sufficiently "lockout" a device, (i.e., steam valve, hydraulic valve, etc.)

Continued from previous page:

Step	Action
NOTE	If a machine or equipment can not be locked out by conventional means call ESH&A. Tagout can be used for isolated instances. For Tagout to be considered, implementation of additional safety measures shall be completed such as the removal of an isolating element, blocking of a controlling switch, opening an extra disconnecting device or the removal of a valve handle to reduce the likelihood of inadvertent energization.
6.	A tag will be filled out by each authorized person indicating the person's name, the date and time of the lockout.
7.	Once the energy isolating device has been locked out and tagged, all potentially hazardous sources or residual energy will be purged or dissipated (i.e., grounding, capacitors, bleeding, venting, lowering to rest position, etc.)
8.	After ensuring that no personnel are exposed, the authorized personnel will operate the normal operating controls to make certain the equipment will not restart. The operating controls MUST be returned to the "off" or "neutral" position after the test.
NOTE	Every person involved with the service or maintenance of the locked out equipment will place their assigned padlock to every lockout device in such manner that if all other padlocks were removed, the person would still have their padlock assuring that every source of energy is still "locked out". No personnel may affix the lockout/tagout device of another person.
9.	The following are to be performed to ensure machinery/equipment is in a zero energy state: • Use a volt meter to verify that work is not energized. • Attach a "ground stick" of sufficient size to handle any possible fault current to all three phases of stored electrical equipment. • Blocking shall be performed on hydraulic equipment such as presses which must be maintained in a stored hazardous potential state.
10.	Maintenance or servicing of the machine or equipment may now be performed.

5.12.3.4 Reactivation of Energy Source

The following are the established procedures for reactivation of an energy source that has been locked and tagged:

Step	Action
1.	When the maintenance and/or service is completed, the work area is to be inspected to ensure that all affected personnel are safely positioned and/or removed. In addition, remove all nonessential items from the equipment.
2.	The lockout, padlock, and tag shall then be removed from the energy isolating device by the authorized personnel who applied the lockout devices.
3.	When the authorized personnel who applied the lockout/tagout device is not available to remove it, that device may be removed provided: a. Verification by the supervisor, group leader or department manager that the authorized personnel who applied the device is not in the facility. b. All efforts to contact the authorized personnel to inform them that their lockout device has been removed. c. The authorized employee, if contacted and cannot return, is asked relevant questions about the status of the equipment or machinery locked out. d. The authorized employee has all relevant information about the lockout and the equipment condition before work resumes.
4.	**Exception:** If the employee who applied their lockout device is not available to remove the lockout device, the device may only be removed by the supervisor, group leader or manager, in accordance with step 3 above.

5.12.3.5 Shift and/or Personnel Changes

If work on a piece of equipment or machinery that is locked out carries over to the next shift, the authorized personnel may remove their lockout device, provided that the next authorized personnel applies their lockout device at the same time the previous authorized personnel removes their lock device.

5.12.3.6 Testing of Machinery, Equipment and/or Trouble-Shooting

When machinery and/or equipment must be tested before service work is completed (i.e., checking motor rotation, checking belt alignment, electrical calibration, etc.) the following procedure shall be used:

Step	Action
1.	Clear the machine and/or equipment of nonessential items.
2.	Safely clear personnel from the machine area.
3.	Remove lockout devices from energy isolating equipment.
4.	Ensure PPE required per OSHA "Safety Related Work Practices" is utilized. (i.e., insulating gloves, mats, sleeves, safety glasses, etc.)
5.	Energize and proceed with the test.
6.	De-energize all systems and reapply lockout devices to the energy isolating devices to proceed with maintenance per Paragraph 5.12.3.3.

5.12.3.7 Working on Energized Equipment

- No work is to be performed on any equipment or machinery which is knowingly "hot", "live", "energized", "pressurized", etc. unless all attempts have been made to schedule the shutdown of equipment or machinery to safely perform the necessary work.

- OSHA states that all energized equipment must be de-energized unless it is demonstrated that de-energization introduces an increased hazard or it is infeasible due to equipment design or operational limitations. Examples of increased hazard or being infeasible include interruption of life support equipment, deactivation of emergency alarm systems, shutdown of hazardous location ventilation equipment.

NOTE: The severity of increased hazard or being infeasible justifies not de-energizing equipment or machinery, not personal convenience.

- **Exemption:** Testing of electrical circuits may be performed live with probes having approved insulating properties.

- If the equipment or machinery cannot be shut down for the required period of time, all work must be postponed until a proper action plan is developed. Personal Protective Equipment including electrical gloves, safety glasses, insulating mats, etc. are required when working on or near energized electrical parts.

5.12.4 TRAINING

Detailed programmatic information is provided via the following institutional training modules:

LOCKOUT TAGOUT TRAINING	**#AL-012**
Intended Audience:	*Mandatory for all workers whose job assignments involve activities such as servicing or maintenance of machines or equipment which may have unexpected energizing, startup, or release of stored energy.*
NOTE:	*Employees performing **ONLY** electrical LOTO do not need to attend this module if they have completed the Basic Electrical Safety Training Module (AL-019).*
Module Format:	*Module is Classroom discussion with video, handouts and quiz.*
Associated Retrain Period & Format:	*Two year retrain: Retrain module consists of classroom discussion with video, handouts and exam.*

BASIC ELECTRICAL TRAINING	**#AL-019**
Intended Audience:	*Lockout/Tagout for electrical work is covered in Basic Electrical Safety. It is mandatory for Ames Laboratory individuals working on or near exposed electrical parts.*
Module Format:	*Classroom Instruction with quiz. Estimated completion time: 4 hours.*
Associated Retrain Period & Format:	*Three-year retrain. Retrain module consists of Computer Based Training and exam.*

Group / activity-specific training shall be given to each employee prior to work that includes a discussion of physical hazards, chemical hazards, hazard mitigation, location of MSDS's and other safety information, emergency response measures and any other procedural information. This training shall be documented by the Supervisor / Group Leader / Department Manager.

5.12.5 PERFORMANCE CHECKLISTS

Supervisors / Group Leaders / Department Managers shall:

- ❑ Ensure that all questions pertaining to the lockout/tagout program are appropriately answered for each employee on the Training Needs Questionnaire and that all hazards are denoted on the Hazard Inventory.
- ❑ Attend "Lockout/Tagout Training" (AL-012). Consult the Ames Laboratory/IPRT training schedule for the next available class.
- ❑ Ensure outside contractors performing work at the facility adhere to the lockout/tagout program.
- ❑ Assist ESH&A with the development of machine specific lockout/tagout procedures for equipment with multiple energy sources.

Employees shall:

- ❑ Attend required course as denoted on Employee Training Profile. Consult the Ames Laboratory/IPRT training schedule for the next available class.
- ❑ Maintain lockout/tagout equipment.
- ❑ Fully adhere to the requirements set forth in the lockout/tagout program when installing, servicing and maintaining machinery and equipment.

Environment, Safety, Health & Assurance (ESH&A) shall:

- ❑ Conduct periodic inspection of the energy control program at least annually to ensure that the procedures and requirements are being followed.
- ❑ Develop lockout/tagout procedures for machines with multiple energy sources (more than one source).
- ❑ Conduct lockout/tagout training and refresher training.
- ❑ Periodically review and update the Lockout/Tagout Program.
- ❑ Evaluate employees who are authorized to perform Lockout/Tagout annually.
- ❑ See Appendix A - Authorized Employee LOTO Annual Certification form to be used to document certification.

Contractors shall:

- ❑ Comply with the Lockout/Tagout program.

Appendix A

Authorized Employee LOTO Annual Certification

The purpose of this observation is to ensure this employee understands the procedures used for the control of energy associated with equipment when performing service / maintenance. The below listed employee successfully conducted the Lockout – Tagout and understands the 10 step procedure listed below:

Employee _____ Date _____

Department _____ Shift _____

Selected Equipment _____

Type of Energy (Circle all that apply): Electrical, Potential/Stored, Kinetic/in motion, Pneumatic, Hydraulic, Thermal, Chemical, other?? _____

Does the task qualify under the exceptions of the procedure, e.g. minor adjustments; work on cord/plug connected equipment under exclusive control of employees performing the work, etc. If no, then proceed with remaining questions.

Installing Locks and Tags

Key Elements	Yes	No	NA
1. Were affected employees notified?			
2. Was the equipment shutdown using its normal operating controls?			
3. Were all energy sources identified and isolated?			
4. Were locks and tags appropriately applied to all energy controls (each person applies personal lock and tag)??			
5. Were areas of stored and / or residual energy identified and released (i.e., volt meter)?			
6. Was the equipment tested (verified) to ensure inadvertent startup is not possible (operate the controls / use volt meter)?			
NOTE: Is it understood that cord and plug connected equipment that is not under the exclusive control of the "Authorized Employee", or goes beyond the work shift, must be locked and tagged using a plug lockout device?			

Restoring from LOTO

1. Was equipment checked / verified to ensure all guards / safety devices are in place and functional?			
2. Were "Affected Employees" notified that locks and tags are being removed?			
3. Were the equipment controls checked / verified to ensure they are in neutral or off position?			
4. Were the locks and tags properly removed and equipment ready for use?			

Changes or Recommendation in Procedure: _____

Evaluator Signature _____ Date: _____

Employee Signature _____ Date: _____

Form # 10200.100

5.13 SCAFFOLDING AND FALL PROTECTION

Applicability Statement: *This section applies to all employees and contractors who use scaffolding. The requirements include assembly, use, disassembly, tie offs, guarding, fall protection and OSHA guidelines of Tubular Welded Frame Scaffold and Manually Propelled Mobile Ladder Stands and Scaffolds.*

This procedure intentionally does not cover:

Masons Adjustable Multiple Point Suspension Scaffolds	Wood Pole Scaffolding
Tube and Coupler Scaffolds	Two Point Suspension Scaffolds
Stone Setters Adjustable Multiple Point Scaffolds	Horse Scaffolds
Single Point Adjustable Suspension Scaffolds	Needle Beam Scaffolds
Plasters/Decorators/Large Area Scaffolds	Boatswain's Chairs
Bricklayers Square Scaffolds	Carpenters Bracket Scaffolds
Interior Hung Scaffolds	Ladder Jack Scaffolds
Window Jack Scaffolds	Float or Ship Scaffolds

Call ESH&A for specific safety rules if the above types of scaffolds are to be used.

5.13.1 REFERENCES

OSHA 29 CFR 1910.21 Definitions
OSHA 29 CFR 1910.28 Safety Requirements of Scaffolding
OSHA 29 CFR 1910.29 Manually Propelled Scaffolding
Manual 10200.002 ESH&A Program Manual, Ladder Safety, Section 5.15

5.13.2 BACKGROUND

The Scaffolding and Fall Protection Program is designed to prevent employees and contractors from hazards associated with falling. Scaffolds must be furnished and erected in compliance with this program for employees and contractors engaged in work that cannot be conducted safely from the ground or from solid construction. Ladders used for such work must comply with Section 5.15 Ladder Safety in this ESH&A Program Manual.

5.13.3 PROGRAM INFORMATION

5.13.3.1 Definitions:

Scaffold: A temporary elevated platform used for supporting workmen and materials. Scaffolding and its components must be capable of supporting 4 times the maximum intended load.

Competent Person: One who is capable by education or experience of identifying existing and predictable hazards with scaffolding and working conditions and who has the authorization to take prompt corrective action to eliminate them.

Toe-board: A barrier at the platform level erected along the exposed sides and ends of a scaffold platform to prevent falls and materials/tools from falling off onto employees below. Toeboards must be a minimum of 4 inches in height.

Climbing Ladder: A separate ladder attached to the scaffolding structure for climbing and descending.

Full Dimension Planking: Planking cut to dimension after shrinkage has occurred.

Tag Line: Used to hoist materials onto scaffolds. Materials are not to be carried up the ladder onto the scaffold by the operator.

Guardrail System:

- Guardrails are not to be less than 2 x 4 (stock) inches or the equivalent
- Not less than 36 inches or more than 42 inches high
- A mid-rail, of 1 x 4-inch lumber or equivalent
- Toeboards are to be installed at all open sides on all scaffolds more than 6 feet above the ground or floor.

5.13.3.2 Material Requirements Used To Erect Scaffolding

- Scaffolds must be furnished and erected in compliance with this program for employees and contractors engaged in work that cannot be done safely from the ground or from solid construction, except that ladders used for such work must comply with Section 5.15, Ladder Safety in this ESH&A Manual.

- The footing or anchorage must be sound, rigid, and capable of carrying the maximum intended load without settling or displacement. Unstable objects such as barrels, boxes, bricks and concrete blocks or other such materials must not be used to support scaffolds or planks.

- Scaffolds and their components must be capable of supporting without failure at least four times the maximum intended load.

- Frames and accessories for scaffolds must be maintained in good repair and every defect, unsafe condition, or noncompliance with this section must be immediately corrected before further use of the scaffold. Any broken, bent, excessively rusted, altered, or otherwise structurally damaged frames or accessories must not be used.

- Scaffold exceeding 30 feet horizontally and/or 26 feet vertically must be guyed/tied at equal intervals and securely braced against the building or structure.

- Scaffolds cannot be loaded in excess of the working load for which they are intended.

- The work level platform of scaffolds must be made of wood, aluminum or plywood planking, steel or expanded metal, for the full width of the scaffold, except for necessary openings. The work platform must be secured in place. All planking must be 2 inch (nominal) scaffold grade, minimum 1500 (stress grade) construction grade lumber or equivalent.

- All planking shall be "Scaffold Grade" as recognized by grading rules for the species of wood used. The maximum permissible spans for 2 X 9 inch or wider planks are shown in the following tables:

FULL THICKNESS UNDRESSED LUMBER

Working Load	25 lbs./sq. ft	50 lbs./sq. ft	75 lbs./sq. ft
Permissible Span	10 ft	8 ft	6 ft

NOMINAL THICKNESS LUMBER

Working Load	25 lbs./sq. ft	50 lbs./sq. ft
Permissible Span	8 ft	9 ft

- All continuous planking or platforms must be overlapped (minimum of 12 inches) or secured from movement.

- Scaffold planks must extend over their end supports not less than 6 inches and no more than 18 inches.

- Scaffolding uprights, bracing and planking must be plumb, secure and rigidly braced to prevent swaying and displacement.

- Scaffolds where people are required to work or pass under must have a screen attached between the toe-board and the top guardrail, on all open sides of scaffolding, consisting of No. 18 gauge US Standard Wire one half inch mesh or the equivalent.

- A climbing ladder or stairway must be provided for proper access and egress and must be affixed or built into the scaffold and so located that its use will not have a tendency to tip the scaffold.

- Guardrails are required for all scaffold work levels 6 feet or higher above the ground or floor with a standard (4 inch nominal) toe-board.

- The minimum platform width for any work level must not be less than 20 inches.

- Scaffolds must be secured to permanent structures, through the use of anchor bolts, reveal bolts, or other equivalent means when the height of the scaffold exceeds four (4) times the minimum base dimension

NOTE: See Appendix A for proper erection of Tubular Frame Scaffolding Components.

5.13.3.3 General Employee Safety Rules

- Scaffolds must not be altered or moved horizontally while they are in use or occupied.
- Periodic inspections must be made of all welded frames and accessories and any maintenance, including painting or minor repairs authorized by the manufacturer, must be made before further use.
- All scaffolds must be erected by competent and experienced personnel.
- Materials being hoisted onto and off a scaffold must have a tag line.
- Overhead protection (hard hats) must be used for workers on and under scaffolding exposed to overhead hazards.
- Scaffolds must not be used to support a crane, pulleys, hoist or block and tackle to lift or pull objects.
- Employees must not work outdoors on scaffolds during storms or high winds.
- Employees must not work on scaffolds which are covered with ice or snow, unless all ice or snow is removed and planking sanded to prevent slipping.
- Tools, materials and debris must not be allowed to accumulate in quantities to cause a hazard.

5.13.3.4 Safety Rules for Tubular Welded Frame Scaffolds

- Metal tubular frame scaffolds, including accessories such as braces, brackets, trusses, screw legs, ladders, etc., must be designed to safely support four times the maximum intended load.
- Spacing of the panels or frames must be consistent with the loads imposed.
- Diagonal braces must be used to support scaffolding. For securing vertical members together laterally, cross braces must be of such length as will automatically square and align the scaffolding. All brace connections must be made secure.
- Scaffold legs shall be set on adjustable bases or plain bases placed on mud sills or other foundations adequate to support the maximum intended load.
- The frames must be placed one on top of the other with coupling or stacking pins to provide proper vertical alignment of the legs.
- Where uplift may occur, panels must be locked together vertically by pins or other equivalent suitable means.

- Where leveling of the elevated work platform is required, screw jacks must be provided in the base section of each mobile unit.

- Guardrails not less than 2x4 inch lumber or the equivalent and not less than 36 inches or more than 42 inches high, with a mid-rail (1"x4" lumber) and toe-board must be installed at all open sides on all scaffolds more than 6 feet above the ground or floor. Toe boards must be a minimum of 4 inches in height.

NOTE: See Appendix A for proper erection of Tubular Frame Scaffolding Components.

5.13.3.5 Safety Rules for Manually Propelled Mobile Scaffolds

- Vertical members must be locked together vertically by pins to prevent uplift. Bolts or fasteners used to connect sections of scaffolding must be of adequate size at each connection to maintain the designed strength of the unit.

- The minimum platform width for any work level must not be less than 20 inches.

- The supporting structure for the work level must be rigidly braced, using adequate cross bracing or diagonal bracing with ridged platforms at each work level.

- Wheels or casters must be designed for strength and dimensions to support four times the designed working load.

- All scaffold casters must be provided with a positive wheel and/or swivel lock to prevent movement.

- The maximum work level height must not exceed four (4) times the minimum or least base dimension of any mobile scaffold. Where the basic mobile unit does not meet this requirement, outriggers must be employed to achieve this base dimension or provisions must be made to guy or brace the unit against tipping.

NOTE: See Appendix A for proper erection of Tubular Frame Scaffolding Components.

5.13.4 TRAINING

Detailed programmatic information is provided via the following institutional training modules:

SCAFFOLDING SAFETY TRAINING	**#AL-139**
Intended Audience:	*Mandatory for all workers whose job assignment involves assembly or use of Tubular Welded Frame Scaffold and Manually Propelled Mobile Ladder Stands and Scaffolds*
Module Format:	*Module is classroom/video training with an exam. Estimated completion time: 1.0 hour.*
Associated Retrain Period & Format:	*No retrain*

Group / activity-specific Scaffolding Training shall be given to each employee prior to start of work. Training will include a discussion of physical hazards, hazard mitigation, inspection of scaffolding, assembly, use, dismantling, fall protection, emergency response measures, procedural information and other safety information. This training shall be documented by the Supervisor / Group Leader / Department Manager.

5.13.5 PERFORMANCE CHECKLITS

Supervisors / Group Leaders / Department Managers shall:

- ❑ Ensure that all questions pertaining to the Scaffolding Safety Program are appropriately answered for each employee on the Training Needs Questionnaire and that all hazards are denoted on the Hazard Inventory.
- ❑ Attend Scaffolding Safety Training. Consult the Ames Laboratory/IPRT training schedule for the next available class.
- ❑ Ensure outside contractors performing work at the facility adhere to the Scaffolding Safety Program.

Employees shall:

- ❑ Attend required course as denoted on Employee Training Profile. Consult the Ames Laboratory/IPRT training schedule for the next available class.
- ❑ Inspect scaffolding every day of use or at beginning of each shift scaffolding is used.
- ❑ Remove, replace or repair scaffolding as necessary.
- ❑ Comply with the requirements of this program.
- ❑ Attend Scaffolding Safety Training.

Environment, Safety, Health & Assurance (ESH&A) shall:

- ❑ Periodically review and update the program requirements according to changes in regulations.
- ❑ Periodically audit the performance of scaffolding use to ensure compliance and safety.
- ❑ Conduct training.
- ❑ Inspect scaffolds.
- ❑ Shutdown work on scaffolds not approved by ESH&A.

Contractors shall:

- ❑ Compliance with the Ames Laboratory Scaffolding Safety Program or their equivalent program.
- ❑ Failure to comply with the Scaffolding Safety and Maintenance Program may result in suspension of work.

Appendix A Tubular Frame Scaffolding Components

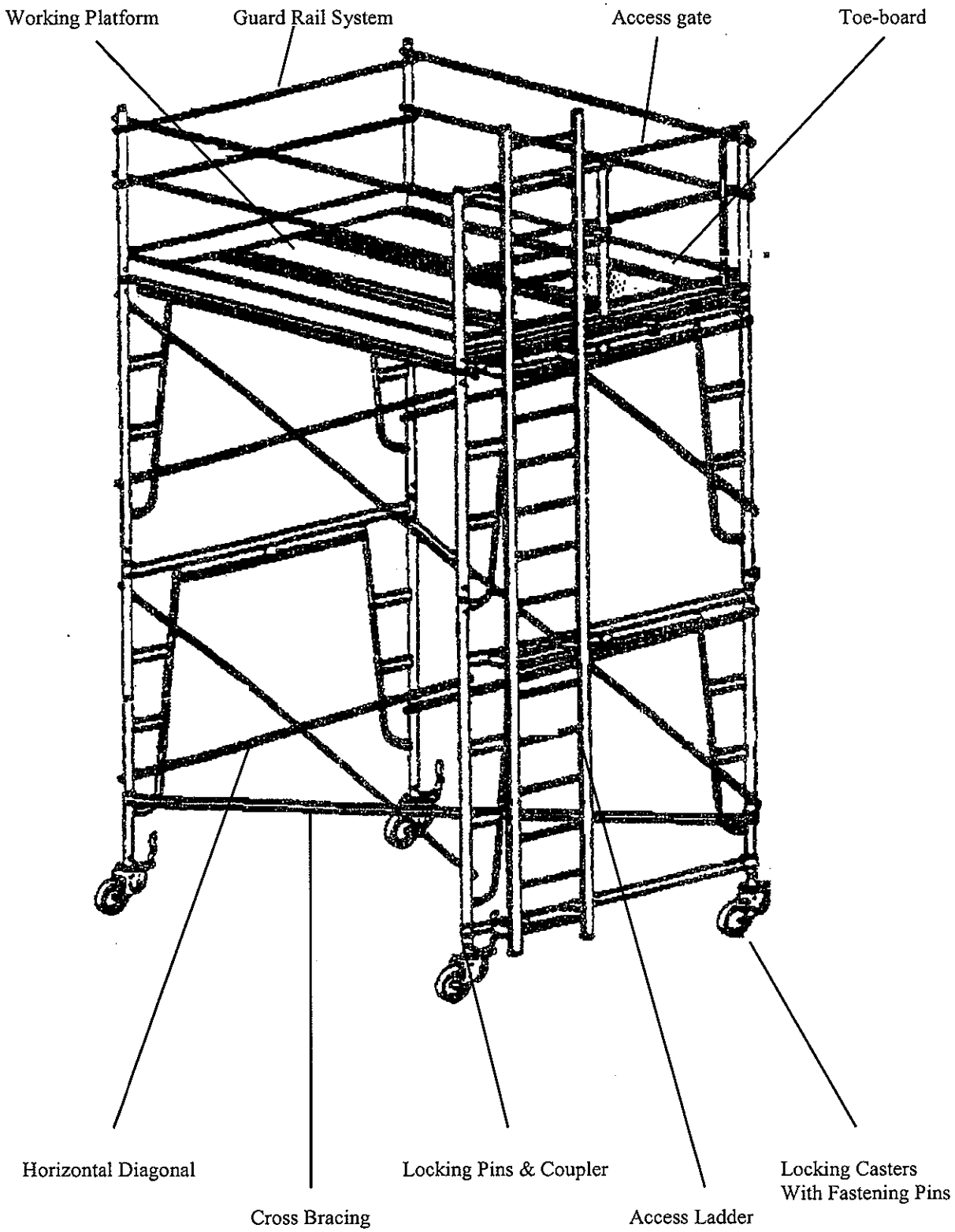

5.14 EYE WASHES AND SAFETY SHOWERS

Applicability Statement: *This program included the provisions for and maintenance of safety showers and eyewashes in a usable, ready condition easily accessible for all employees for the rendering of basic first aid from chemical or physical exposure. It is applicable to....*

5.14.1 REFERENCES

OSHA 1910.151 Medical Services and First Aid

5.14.2 BACKGROUND

The purpose of this program is to outline the procedures, responsibilities and requirements for providing and maintaining Eyewashes and Safety Showers.

5.14.3 PROGRAM INFORMATION

5.14.3.1 Eye Washes and Safety Showers

- Identified by readily identifiable - highly visible signs.
- Located in all areas where a corrosive, injurious or harmful material is used in a manner where potential skin or eye contact exists.
- Routed along normal walkways and situated where easily accessible.
- No greater than 100 feet from hazards such as: acids, caustics, corrosives, solvents, chemical tanks, powders, etc.
- Never blocked rendering the emergency equipment ineffective.

5.14.3.2 Portable (non-plumbed) Eyewashes

- Capable of delivering potable water to the eyes at not less than 1.5 liters per minute (0.4 gallons per minute) for fifteen (15) minutes.
- Meet all of the provisions stated in 5.14.3.1.

NOTE: Hand held plastic squeeze bottles are unacceptable for eyewashes because they do not meet the requirement to supply a minimum of 15 minutes of continuous water flow.

5.14.4 TRAINING

Detailed programmatic information is provided via the following institutional training modules:

EMERGENCY AWARENESS TRAINING	**#AL-002**
Intended Audience:	*Mandatory for all new employees*
Module Format:	*Employees receive Eye Wash and Safety Shower Safety information as part of the Laboratory's Emergency Awareness Training (EAT). Training is provided by the Safety Coordinator or a designee and is documented on an EAT Form. Estimated completion time: 1/2 hour*
Associated Retrain Period & Format:	*No retrain required*

Group / activity-specific General Employee Training shall be given to each employee prior to start of work. Training will include a discussion of physical hazards, chemical hazards, hazard mitigation, location of MSDS's, emergency response measures and, procedural information and other safety information. This training shall be documented by the Supervisor / Group Leader / Department Manager.

5.14.5 PERFORMANCE CHECKLISTS

Supervisors / Group Leader / Department Manager shall:

- ❑ Assure workers have had group / activity specific training for the area.
- ❑ Review their operation to determine where eyewashes and safety showers may be required. Consult with ESH&A for guidance.
- ❑ Submit work orders to Facilities Services Group for additional safety showers and eyewashes where a deficiency exists (concurrence with ESH&A).
- ❑ Ensure employees wear appropriate eye protection, gloves, aprons, gauntlet sleeves and other protective equipment when performing a task that involves working with chemicals or in a safety glass designated area.
- ❑ Orient employees on locations and correct use of safety showers and eyewashes and the importance of maintaining clear access to eyewashes and safety showers at all times.
- ❑ Report any non-operational equipment to Facilities Services Group for immediate repair.
- ❑ Provide temporary eyewash facilities or safety showers until non-operational equipment is repaired.
- ❑ Call Occupational Medicine and request immediate medical assistance if a chemical gets into someone's eye or on their body. Immediately provide a copy of all applicable MSDSs to Occupational Medicine.

Employees shall:

- ❑ Wear all personal protective equipment as outlined in procedures and recommendations in Material Safety Data Sheets.
- ❑ Bring all unsafe acts, practices, or conditions to their coworker's attention.
- ❑ Report any non-operational equipment to Facilities Services and immediately tagout the non-operational equipment until it is repaired. If employees are unable to correct an unsafe situation, they must inform the next level of management and ESH&A.
- ❑ Keep safety showers accessible and clean. (This includes, but is not limited to, no dumping of chemicals or other contaminants into the drain of an eyewash or safety shower.)

Facilities Services shall:

- ❑ Inspect/Test eyewashes monthly (flow water to ensure proper flow and prevent foreign and sediment materials from accumulating in nozzles and supply pipes).
- ❑ Inspect/Test safety showers quarterly.
- ❑ Maintain records of inspection.
- ❑ Provide and install appropriate safety showers and eyewashes when designing or renovating areas.
- ❑ Immediately (within 24 hours) repair safety showers and eyewashes when identified as being non-operational.
- ❑ Install eyewashes (fixed or hand-held) no less than 33 inches, but no more than 45 inches, above floor or platform.

Environment, Safety, Health and Assurance shall:

- ❑ Periodically review and update regulations applicable to Ames Laboratory.
- ❑ Advise Facilities Services where safety showers and eyewashes should be located.

5.15 LADDER SAFETY PROGRAM

Applicability Statement: *This section applies to all employees and contractors performing activities on ladders and/or rolling stairs.*

5.15.1 REFERENCES

OSHA 1910.24 Fixed Stairs
OSHA 1910.25 Portable Wood Ladders
OSHA 1910.26 Portable Metal Ladders
OSHA 1910.27 Fixed Ladders

5.15.2. BACKGROUND

The purpose of the Ladder Safety Program is to prevent injuries to employees and contractors by ensuring proper maintenance, inspection and use of ladders and rolling stairs. This program does not apply to step stools or rolling stairs having one or two steps.

This program applies to but is not limited to:

Step Ladders	Extension Ladders	Fixed Ladders
Rolling Stairs	Slide Rolling Ladders	Platform Ladders

5.15.3 PROGRAM INFORMATION

5.15.3.1 General Equipment Requirements

- The maximum length for single straight ladders is 30 feet and the maximum length for extension ladders is 60 feet.

- Straight/extension ladders shall be equipped with safety feet.

- The maximum length for step ladders shall be twenty (20') feet. Step ladders must have legs fully extended and locked in the open position before use. Do not use a step ladder as a straight ladder. Step ladders are not designed or approved for leaning against the wall, equipment, etc.

- Ladders must be of sufficient length so that work can be performed safely while standing on or below the second rung from the top. Standing on the top rung is not permitted. The top of the ladder shall not be used as a seat.

- Fixed ladders must be designed and constructed to accept a minimum concentrated live load of 200 pounds.

- This program establishes minimum maintenance, inspection and use requirements for ladders and rolling stairs. The program applies to all employees and contractors who use ladders.

- Cages are required for fixed ladders longer than twenty (20') feet and shall extend a minimum of 42 inches above the top of a landing.

5.15.3.2 Use Requirements

- Fiberglass or wooden ladders will be used for all work near electrical equipment. Aluminum ladders are acceptable for other applications.
- Ladders shall not be used in a horizontal position such as for platform, runways, or scaffolds.
- Ladders shall not be placed in front of a door unless the door is locked, roped off, or other wise guarded with a sign on the door.
- Employees must face the ladder while ascending, descending, or standing on the ladder.
- Employees must have their hands free of material while climbing ladders. Hand lines and/or tool pouches will be used to raise or lower material.
- A ladder shall not be used to support more than one (1) individual at a time, unless it is specifically designed to accommodate more than one (1) person.
- When using a straight or extension ladder to climb onto a roof or platform, the top of the ladder shall extend at least three (3') feet above the roof or platform and must be tied off securely. Never climb over the top of the ladder.
- If the ladder has hooks, both hooks shall be secured over an edge before using.
- All straight ladders shall be placed as to prevent slipping or secured at the top of the ladder before starting the job. A second person shall hold the bottom of the ladder while the top is being secured.
- Straight ladders shall be placed so that the distance from the base of the ladder is approximately one-fourth (1/4) of the length of the ladder.

Example: A sixteen (16') foot ladder should be placed so the bottom is four (4') feet away from the wall.

- Ladders shall be returned to their assigned place of storage when the work is finished. They shall also be stored in a manner that provides ease of access and inspection. Ladders in storage shall be chained or other wise secured against the wall.
- The bracing on back legs and the tops of step ladders shall not be used as steps unless specifically designed for that purpose.

- Any other use not outlined in this document is strictly forbidden - such as, but not limited to:
  - Ladders shall not be placed on top of boxes, barrels, or other unstable bases.
  - Ladders shall not be spliced together as braces or skids.

5.15.3.3 Inspection & Maintenance requirements:

- All portable ladders shall be kept in good condition. Employees using ladders will be responsible for performing an inspection prior to use and reporting any defective ladders to their Supervisor/Manager. Defective ladders must be taken out of service immediately and destroyed if repair is not feasible.

- Ladder rungs shall be kept free of grease, oil, dirt, and other foreign materials.

- Wooden ladders shall not be painted. The wood must be free of splinters, sharp edges, and evidence of defects, decay, or other irregularities. Linseed oil may be used for preservation.

- Inspection of ladders, including step ladders, rolling steel ladders (mobile stairs), and extension ladders will be performed by users / owners before each use.

- An annual inspection of all ladders, including step ladders, rolling steel ladders/mobile stairs (having 4 or more steps) and extension ladders. The inspection is conducted by Facilities Services. After the inspection is completed, the ladders will be marked with colored tape indicating the year of inspection.

- When an employee inspects a ladder prior to use, they shall check the last inspection date on the tag. If it has been longer than one year since the last inspection, if the tag is missing or if the ladder is new, the ladder shall not be used until it is inspected and a tag is affixed. The employee must tag the ladder "Out Of Service" if the ladder is found to be defective or not inspected.

- The ladders shall be inspected:
  - for broken or missing steps / rungs, cleats and rails
  - to ensure steps and rungs are free from grease and oil
  - to ensure ladders are free of sharp edges, burr, etc.
  - for stability (shaking / swaying)

5.15.4 TRAINING

Detailed programmatic information is provided via the following institutional training modules:

LADDER SAFETY TRAINING	**#AL-136**
Intended Audience:	*Mandatory for all workers, whose job assignments involve ladders, rolling stairs with 3 or more rungs.*
Module Format:	*Module is Pamphlet with an exam to be sent to Training Coordinator.*
Associated Retrain Period & Format:	*No retrain*

Group / activity-specific Ladder Training shall be given to each employee prior to start of work. Training will include a discussion of proper use, inspection, storage, physical hazards and hazard mitigation. This training shall be documented by the Supervisor / Group Leader / Department Manager.

5.15.5 PERFORMANCE CHECKLISTS

Supervisors / Group Leaders / Department Managers shall:

- ❑ Ensure that all questions pertaining to the Ladder Safety Program are appropriately answered for each employee on the Training Needs Questionnaire and that all hazards are denoted on the Hazard Inventory.
- ❑ Attend "Ladder Safety Training" (AL-136). Consult the Ames Laboratory training schedule for the Training Module.
- ❑ Ensure outside contractors performing work at the facility adhere to the Ladder Safety Program.
- ❑ Report any deficient ladders.

Employees shall:

- ❑ Attend required course as denoted on Employee Training Profile. Consult the Ames Laboratory/IPRT training schedule for the next available class.
- ❑ Maintain and use ladders in a safe manner.

Environment, Safety, Health & Assurance (ESH&A) shall:

- ❑ Conduct annual inspection of non-Facilities Services Group ladders.
- ❑ Periodically review and update this procedure.
- ❑ Conduct Ladder Safety Training.

Facilities Services Group shall:

- ❑ Conduct annual inspections of Facilities Services Group Ladders.
- ❑ Ensure all new and present employees working with ladders attend Ladder Safety Training.
- ❑ Ensure all contractors comply with the Ladder Safety Program.

Contractors shall:

- ❑ Ladders brought on Ames Laboratory premises will be subject to inspection by both Facilities Services Group and ESH&A.
- ❑ Contractors are to remove ladders that are found to be defective.

5.16 HOISTING AND RIGGING PROGRAM

Applicability Statement: *This section applies to all employees and contractors utilizing fixed and mobile Ames Laboratory cranes, hoists and rigging. It does not address safety regulations regarding crawler cranes that may be brought on-site during construction activities.*

5.16.1 REFERENCES

ANSI B30.2 Overhead and Gantry Cranes
ANSI B30.10 Slings
ANSI B30.16 Overhead Hoists
OSHA 1910.179 Overhead and Gantry Cranes
OSHA 1910.184 Slings
OSHA 1910.28 Personal Protective Equipment
DOE Standard (DOE-STD-10190-2004)

5.16.2 BACKGROUND

The purpose of the Hoisting and Rigging Program is to ensure safe use, maintenance and inspection of cranes, hoists and rigging equipment.

5.16.3 PROGRAM INFORMATION

5.16.3.1 Definitions

Brake is a device used for retarding or stopping motion by friction or power means.

Bridge means that part of a crane consisting of girders, trucks, end ties, and drive mechanism which carries the trolley or trolleys.

Bridge travel means the crane movement in a direction parallel to the crane runway.

Bumper [buffer] is an energy absorbing device for reducing impact when a moving crane or trolley reaches the end of its permitted travel; or when two moving cranes or trolleys come in contact.

Clearance means the distance from any part of the crane to a point of the nearest obstruction.

Crane is a machine for lifting and lowering a load and moving it horizontally, with the hoisting mechanism an integral part of the machine. Cranes, whether fixed or mobile, are driven manually or by power.

Critical Lift is a load item, if damaged or upset would result in a release into the environment of radioactive or hazardous material exceeding the established permissible environmental limits. A critical lift is also a load item that is unique that if damaged would be irreplaceable or not repairable and is vital to a system, facility or project operation.

Designated means selected or assigned by the employer or the employer's representative as being qualified to perform specific duties.

Drum is the cylindrical member around which the ropes are wound for raising or lowering the load.

Emergency Stop Switch is a manually or automatically operated electric switch to cut off electric power independently of the regular operating controls.

Exposed means capable of being contacted inadvertently. Applied to hazardous objects not adequately guarded or isolated.

Fail-safe means a provision designed to automatically stop or safely control any motion in which a malfunction occurs.

Floor-operated crane means a crane which is pendant, radio or nonconductive rope controlled by an operator on the floor or an independent platform.

Gantry crane means a crane similar to an overhead crane except that the bridge for carrying the trolley or trolleys is rigidly supported on two or more legs running on fixed rails or other runway.

Hoist is an apparatus which may be a part of a crane, exerting a force for lifting or lowering.

Hoist chain means the load bearing chain in a hoist.

Inspections

- Frequent - Daily to monthly intervals
- Periodic - 1 to 12 month intervals

Limit Switch is a switch that is operated by some part or motion of a power-driven machine or equipment to alter the electric circuit associated with the machine or equipment.

Load means the total superimposed weight on the load block or hook.

Load Block is the assembly of hook or shackle, swivel, bearing, sheaves, pins, and frame suspended by the hoisting rope.

Main hoist means the hoist mechanism provided for lifting the maximum rated load.

Ordinary Lift means any lift not designated as critical or pre-engineered.

Overhead crane means a crane with a movable bridge carrying a movable or fixed hoisting mechanism and traveling on an overhead fixed runway structure.

Pre-Engineered Lifts is a repetitive, production type lifting operation. Typically not performed at Ames Laboratory.

Qualified Operator (DOE Definition) is one whose competence is recognized by the responsible manager and whose qualifications to perform specific inspection activities has been determined, verified and attested to in writing.

Rated load means the maximum load for which a crane or individual hoist is designed and built by the manufacturer and shown on the equipment nameplate.

Rope refers to wire rope, unless otherwise specified.

Sheave is an assembly of rope and tackle arranged for hoisting and pulling.

Side pull means that portion of the hoist pull acting horizontally when the hoist lines are not operated vertically.

Span means the horizontal distance center to center of runway rails.

Stop is a device to limit travel of a trolley or crane bridge. This device normally is attached to a fixed structure and normally does not have energy absorbing ability.

Suspect / Counterfeit Items is one in which visual inspection, testing or other means indicate that it may not conform to established Government or industry accepted specifications or national consensus standards.

Trolley is the unit that travels on the bridge rails and carries the hoisting mechanism.

5.16.3.2 Requirements for Overhead and Gantry Cranes

- Cranes may be modified and re-rated provided that the modification and the supporting structure are checked thoroughly for the new rated load by a qualified engineer or manufacturer.
- Cranes must be tested when new (125% of rated capacity) and re-tested any time the crane is altered, repaired (i.e., new cable).
- The rated load of the crane must be marked on each side of the crane and clearly legible from the ground.
- The rated load of the hoist must be marked on each side of the unit and clearly legible from the ground.
- A minimum clearance of 3 inches overhead and 2 inches laterally must be provided and maintained between crane and obstructions.
- Obstructions must not jeopardize passageways or walkways by movement of crane.
- Only designated employees who have received training are permitted to operate cranes.

5.16.3.3 Requirements for Stops, Bumpers Rail Sweeps and Guards

- All cranes must be provided with bumpers to prevent crane operation from striking any object.
- Bumpers must be located so there is no direct shear force applied to bolts.
- Exposed moving parts such as gears, set screws, projecting keys, chains, chain sprockets and reciprocating components must be guarded. (Guards must be capable of supporting, without permanent distortion, the weight of a 200 pound person unless the guard is located where it is impossible for a person to step on it.)

5.16.3.4 Requirements for to Sheaves

- Sheave grooves must be smooth and free from surface defects that could cause rope damage.
- Sheaves carrying ropes that can be momentarily unloaded must be provided with close fitting guards or other suitable devices to guide the rope back into the groove when the load is applied.
- Sheaves in the bottom block must be equipped with close fitting guards that will prevent ropes from becoming fouled when the block is lying on the ground with ropes loose.
- Pockets and flanges of sheaves used with hoist chains must be of such dimensions that the chain does not catch or bind during operation.
- All sheaves must be equipped with means for lubrication. Permanently lubricated and/or shielded bearings meet the requirement.

5.16.3.5 Requirements for Ropes (Wire Rope, Synthetic Rope, etc.)

- The crane operator must inspect ropes prior to use.
- Swaged or compressed fittings must be applied as recommended by the rope or crane manufacturer.
- Replacement rope must be the same size, grade, and construction as the original rope furnished by the crane manufacturer.
- Wire ropes must be taken out of service when any of the following conditions exists:
  - Six (6) randomly distributed broken wires in one lay or three (3) broken wires in one strand in one lay.
  - Wear of one-third of the original diameter of outside individual wires.
  - Kinking, crushed, bird caging or any other damage resulting in distortion of the rope structure.

- More than two broken wires in one lay in sections beyond end connections or more than one broken wire at end connection.
- Reduction from nominal diameter of more than:
  - 1/64 inch for diameter up to and including 5/16 inches
  - 1/32 inch for diameters 3/8 inch to and including 1/2 inch
  - 3/64 inch for diameters 9/16 inch to and including 3/4 inch
  - 1/16 inch for diameters 7/8 inch to 1 1/8 inches inclusive
  - 3/32 inch for diameters 1 1/4 to 1 1/2 inches inclusive

- Rope must be secured to drums as follows:
  - No less than two wraps of rope must remain on the drum when the hook is in its extreme low position.
  - Rope end must be anchored by a clasp securely attached to the drum or by a socket arrangement approved by the crane or rope manufacturer.

- The following are the requirements for Rope Clips:
  - Rope clips attached with U-Bolts must have the U-Bolts on the dead or short end of the rope.
  - Spacing and number of all types of clips must be in accordance with the clip manufacturer's recommendation.
  - Clips must be drop forged steel in all sizes manufactured commercially.
  - When the newly installed rope has been in operation for one hour, all nuts on the clip bolts must be retightened.

5.16.3.6 Requirements for Slings

- The crane operator must inspect slings prior to use.

- Each sling must be marked to show the rated capacity.

- Slings must be taken out of service when any of the following conditions exist:
  - Melting or charring of any part of the sling surface
  - Acid or caustic burns
  - Snags, punctures, tears or cuts
  - Broken or worn stitches
  - Distortion of hardware or fittings

5.16.3.7 Requirements for Chains

- The crane operator must inspect chains prior to use. Cleaning the chain may be required to inspect chains since dirt, oil, etc. may hide damage.

- Chains must be taken out of service when any of the following conditions exist:
  - Stretching (When a chain has stretched so that it is now more than three percent longer than it was new, it is unsafe and must be discarded.)
  - Binding (deformed to the extent that individual links cannot move freely)
  - Wear
  - Nicks and gouges

5.16.3.8 Brakes (Holding Brakes)

- Each hoisting unit shall be equipped with at least one self-setting brake applied directly to the motor shaft or some part of the gear train.

5.16.3.9 Suspect/ Counterfeit Items

- Suspect / counterfeit items must not be used in conjunction with hoists / cranes. The DOE Headmark List is to be used as a reference for identifying suspect / counterfeit items.

DOE-STD-1090-2004

DOE HEADMARK LIST

ANY BOLT ON THIS LIST SHOULD BE TREATED AS DEFECTIVE WITHOUT FURTHER TESTING

ALL GRADE 5 AND GRADE 8 FASTENERS OF FOREIGN ORIGIN WHICH DO NOT BEAR ANY MANUFACTURE'S HEADMARKS:

GRADE 5 GRADE 8

GRADE 5 FASTENERS WITH THE FOLLOWING HEADMARKS:

MARK	MANUFACTURER	MARK	MANUFACTURER
J	Jinn Her (TW)	KS	Kosaka Kogyo (JP)

GRADE 8 FASTENERS WITH THE FOLLOWING HEADMARKS:

MARK	MANUFACTURER	MARK	MANUFACTURER
A	Asahi Mfg (JP)	KS	Kosaka Kogyo (JP)
E	Dalai (JP)	M	Minamida Sleybo (JP)
FM	Fastener Co. of Japan (JP)	MS	Minato Kogyo (JP)
H	Hinamoto Metal (JP)	NF	Nippon Fasteners (JP)
J	Jinn Her (TW)	RT	Takai Ltd (JP)
KY	Kyoei Mfg (JP)	UNY	Unylite (JP)
Hollow Triangle	Intasco (CA, TW, JP, YU) (Greater than 1/2 Inch diameter)		

GRADE 8.2 FASTENERS WITH THE FOLLOWING HEADMARKS:

MARK	MANUFACTURER
KS	Kosaka Kogyo (JP)

GRADE A325 FASTENERS (BENNETT DENVER TARGET ONLY) WITH THE FOLLOWING HEADMARKS:

	MARK	MANUFACTURER
Type 1	A325KS	Kosaka Kogyo (JP)
Type 2		
Type 3		

AUGUST 1992

KEY: CA - CANADA JP - JAPAN TW - TAIWAN YU - YUGOSLAVIA

Figure 1-5

5.16.3.10 Requirements for Inspections

5.16.3.10.1 Frequent (Daily) Inspections

To be performed by Ames Laboratory operators include:

- All functional operating mechanisms for maladjustment interfering with proper operation.
- Deterioration or leakage in lines, tanks, valves, drains, pumps, and other parts of air or hydraulic systems.
- Hoist chains including end connections for excessive wear, twist, distorted links interfering with proper function, or stretch beyond manufacturers recommendations.
- Hooks with deformation or cracks. Hooks with 15 percent in excess of normal throat opening or more than 10 degrees twist from the plane of the unbent hook must be discarded.

5.16.3.10.2 Periodic (Annual) Inspections

To be performed by trained inspector includes examination of:

- Deformed, cracked or corroded members, loose bolts or rivets
- Cracked or worn sheaves and drums
- Worn, cracked or distorted parts such as pins, bearing, shafts, gears, rollers, locking and clamping devices
- Excessive wear on brake system parts, linings, pawls and ratchets
- Reduction of rope diameter due to corrosion, wear, etc.
- Number of broken outside wires and wear on outside wires
- Corroded, cracked, bent, worn, or improperly applied end connectors
- Kinking, crushing, cutting or unstranding

NOTE: Any auxiliary rope used must be inspected before each use for the same criteria list above.

5.16.3.10.3 Inspection Tagging

- Status of annual inspection will be indicated by a colored tag printed with the year. The color is on a five(5) year rotation as follows:
  - 2004 = Red
  - 2005 = Blue
  - 2006 = Green
  - 2007 = Black on White
  - 2008 = Yellow

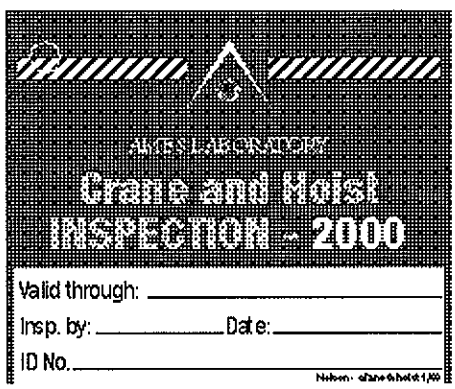

Included on the tag is:
- Valid through:
- Inspected by:
- Date:
- ID No.:

5.16.3.11 Requirements for Testing:

- New or altered cranes must be tested prior to first use:
  - Hoisting and lowering
  - Trolley travel
  - Bridge travel
  - Limit switches, locking and safety devices
- Test loads must not be more than 125% of the rated load.
- ESH&A will arrange testing/inspection service.
- The test reports must be maintained by the owner of the crane.

5.16.3.12 Precautionary Measures for Preventive Maintenance:

- Move the crane to a location where it will cause the least interference with other operations in the area.

- Ensure all controllers are in the off position.

- Open and lockout the main (pneumatic and/or electric) or emergency switches.

- Post a sign (Out Of Order) on the pendant.

- Do not use the crane until after adjustment and repairs have been made:
  - the crane must not be used until all guards have been reinstalled,
  - safety devices reactivated, and
  - maintenance equipment removed.

- Repairs by welding or reshaping are not permitted unless authorized by the manufacturer.

- Replace all critical parts that are cracked, broken, bent or excessively worn.

5.16.3.13 Requirements for Attaching, Handling, and Moving a Load:

- Do not load the crane beyond its rated capacity (except for test purposes).

- Ensure hoist chain or hoist rope is free from kinks or twists and not wrapped around the load.

- Attach the load to the load block hook by means of slings or other approved devices.

- Ensure slings clear all obstacles.

- Secure and balance the sling or lifting device before it is lifted more than a few inches.
- Hoist rope must not be kinked.
- Multiple part lines must not be twisted around each other.
- The hook must be brought over the load in such a manner as to prevent swinging.
- Cranes must not be used for side pulls.
- While any employee is on the load or hook, there must be no hoisting, lowering, or traveling.
- Do not carry loads over personnel.
- Test the brakes each time a load is approaching the rated load capacity.
- Test the brakes by raising the load a few inches and applying the brakes.
- Do not lower the load below the point where less than two full wraps of rope remain on the hoisting drum.
- Do not leave the controls while the load is suspended. Lower the load to the ground and disengage.

5.16.4 TRAINING

Detailed programmatic information is provided via the following institutional training modules:

HOISTING AND RIGGING TRAINING	**#AL-014**
Intended Audience:	*Mandatory for all workers whose job assignments involve use, servicing or maintenance and inspection of hoists.*
Module Format:	*Module is Classroom discussion with video, handouts, and quiz.* *Training will cover:* • *OSHA Guidelines* • *Equipment* • *Procedures* • *Authorization* • *Etc.* *Estimated completion time: 1.5 hours*
Associated Retrain Period & Format:	*Three Year Retrain: Retrain module consists of classroom discussion, handouts, hands on use (practice lift) and exam.* *Estimated completion time: 1.5 hours*

HOISTING AND RIGGING Inspector	**#AL-158**
Intended Audience:	*Mandatory for all workers whose job assignments involves annual inspection of hoists.*
Module Format:	*Module is classroom discussion with video.* *Training will cover:* • *OSHA Guidelines* • *Equipment* • *Procedures* • *Inspection Criteria* • *Etc.* *Estimated completion time: 1.0 hour*
Associated Retrain Period & Format:	*Annual Retrain: Retrain module consists of classroom discussion, with video.*

Group / activity-specific training shall be given to each employee prior to work that includes a discussion of physical hazards, chemical hazards, hazard mitigation, and any other procedural information.

5.16.5 PERFORMANCE CHECKLISTS

Group Leaders / Department Managers shall:

- ❑ Ensure that all questions pertaining to the Hoist and Rigging Program are appropriately answered for each employee on the Training Needs Questionnaire and that all hazards are denoted on the Hazard Inventory.
- ❑ Ensure employees who operate cranes and hoist attend the Crane, Hoist and Rigging Program Training (AL-014). Consult the Ames Laboratory/IPRT training schedule for the next available class.
- ❑ Ensure outside contractors performing work at the facility adhere to the Hoist and Rigging Program.

Employees shall:

- ❑ Attend required course as denoted on Employee Training Profile. Consult the Ames Laboratory/IPRT training schedule for the next available class.
- ❑ Fully adhere to the requirements set forth in the Hoist and Rigging Program.
- ❑ Wear Personal Protective Equipment as necessary.
- ❑ Complete daily inspection checklist for each day the hoist(s) is used. If determined to be deficient, lock and tag the equipment out of service and notify appropriate supervisor and group leader.

Environment, Safety, Health & Assurance (ESH&A) shall:
- ❑ Periodically review and update the Hoist and Rigging Program.
- ❑ Conduct Hoist and Rigging Training (AL-158) and refresher training.
- ❑ Maintain Crane, Hoist and Rigging Inventory and documentation of inspections.
- ❑ Notify owners of annual inspection and administer the inspection.

Engineering Services Group shall:
- ❑ Conduct annual inspections of all operative hoists and cranes belonging groups other than Facilities Services.
- ❑ Be familiar and comply with this program.
- ❑ Inform contract personnel, prior to work startup of this program if their work involves a crane.

Facilities Services Group shall:
- ❑ Be familiar and comply with this program.
- ❑ Conduct annual inspections of all operative hoists and cranes belonging Facilities Services.
- ❑ Inform contract personnel, prior to work startup of this program if their work involves a crane.
- ❑ Notify ESH&A when portable cranes are brought on site.

Contractors shall:
- ❑ Comply with the Hoist and Rigging Program.
- ❑ Comply with the Crane Safety Program. Failure to comply may subject the contractor to immediate discharge.

NOTE: Different rules apply for portable cranes brought on site by contractors. ESH&A must be notified when such cranes are brought to Ames Laboratory.

Appendix A

Hoisting & Rigging Inspection Checklist

Prior to the use **of an Ames Laboratory Hoist/Crane the following inspection items are to be checked to insure that the equipment is in good working order and that operation will not endanger personnel or property. The following inspection needs to be completed only once per day that the hoist/crane is operated.** Form # 10200.119

An explanation of the inspection items listed below and the inspection procedures can be found on the back of this form. Place an "O" in the box if an inspection item checks out "OK". Place an "X" in the box if an inspection item is deemed unsatisfactory. When an item is marked with an "X" fill out the back of this form to indicate the malfunction and the corrective action. All items must be marked with an "O" before using the forklift.

Date	1.Load Hook & Blocks	2. Wire Rope or Chains	3. Cracked or Worn Sheaves & Drums	4. Bridge Wheels and Bearings	5. Trolley and Rails	6. Hydraulic Hoses, Pump & Controls	7. Tires and Wheels (Where Applicable)	8. Bumpers/End Stops	9. Current Inspection Sticker	10. Capacity Posting	11. Electrical Disconnect Accessible	12. Lubrication	13. Rigging Equipment in (Synthetic Slings, Chains, Wire Rope)	14. Structural	15. PPE (Personal Protective Equipment)	Initials

Hoisting & Rigging Inspection Checklist Instructions

If damage to the Hoist/Crane or Rigging is noted or a checklist item does not meet the criteria described below, the user should contact their supervisor to determine a corrective course of action. Do not use the equipment until all checklist items are listed as "OK" per the instructions below. Follow the instructions below for each of the Hoists/Cranes and Rigging Inspection Checklist Items:

15. Load Hook & Blocks – Inspect the load hook for twist, expansion of throat opening and wear. Inspect the load blocks for obvious damage (cracks, wear, rust, etc.) and lubrication. Any damage that jeopardizes the workability of the equipment or its ability to carry a load should be noted.
16. Wire Rope or Chains – Inspect the wire rope for broken wires, kinking, bird-caging, chemical damage, etc. Inspect chains for worn links, stretching, chemical damage, etc.
17. Cracked or Worn Sheaves and Drums – Check for surface defects such as catches, binding, lubrication, etc.
18. Bridge Wheels and Bearings – Check wheels for damage/wear and bearings for damage and lubrication.
19. Trolley and Rails – Inspect trolley and rails for smooth operation, no damaged welds, proper connections, etc.
20. Hydraulic Hoses, Pump & Controls – Inspect hoses, pump and controls for leakage, splits/cracks in hoses and any obvious damage.
21. Tires/Wheels – For mobile hoists/cranes inspect the tires or wheels for damage and ensure they are lubricated for smooth operation.
22. Bumpers/End Stops – Inspect bumpers and end stops to ensure they are in place and firmly secured.
23. Current Inspection Sticker – Ensure the annual inspection sticker is current. If not, contact ESH&A or Engineering Services for inspection.
24. Capacity Posting – Inspect the hoist/crane to ensure the unit is posted with the maximum weight load capacity.
25. Electrical Disconnect Accessible – For electrical hoists/cranes ensure the electrical disconnect is immediately accessible.
26. Lubrication – Inspect all moving parts to ensure they move freely.
27. Rigging Equipment (Synthetic Slings, Chains and Wire Rope):
    - Inspect Synthetic Slings for melting or charring, acid or caustic burns, snags, punctures, tears or cuts, broken or worn stitches and distortion of hardware or fittings.
    - Inspect Chains for stretching, binding, wear, nicks and gouges.
    - Inspect Wire Ropes for kinking, bird caging, wear, broken wires, etc.
28. Structural – Inspect welds and frame for any obvious damage.
29. PPE (Personal Protective Equipment) – Inspect PPE including gloves, steel toed shoes and hard hats to ensure proper fit and effective protection.

If any of the items above are deemed unsatisfactory fill out the following form and forward to ESH&A or Engineering Services to correct:

Date	Checklist Item #	Description of Unsatisfactory Condition	Date Corrected	Corrected by (Employee #)

5.17 WORKING ALONE

Applicability Statement: *This section applies to all employees who work during non-standard hours (5 P.M. – 8 A.M., weekends and holidays) when performing activities that require only one person, but due to the hazardous nature must not be performed solo.*

5.17.1 REFERENCES

OSHA 1910.146 Permit Required Confined Spaces
Manual 46400.002 ESH&A Program Manual, Confined Space Entry Program, Section 5.18
Policy 46300.003 Facilities Services Safety Policy
Procedure 10200.010 Readiness Review Procedure

5.17.2 BACKGROUND

The purpose of this program is to establish the requirements for employees to work alone during off hours. Personal enterprise, diligence, and innovative procedures are encouraged at Ames Laboratory. It is also Ames Laboratory policy to ensure that employees are not put at risk. Supervisors are charged with the responsibility of reviewing and documenting which activities require working alone procedures and approval. For this reason:

- working alone will be prohibited for hazardous tasks unless safety procedures are developed to ensure personnel safety
- all tasks shall be reviewed (see Readiness Review Procedure10200.010) and documented
- activities that change significantly require additional review (see Readiness Review Procedure 10200.010) and documentation.

Definitions:

Buddy or Attendant:
A co-worker on a "one person" job where the chances of an incapacitating accident cannot be eliminated for the solitary worker.

Non-Standard Hours:
5 P.M. – 8 A.M., weekends and holidays

Hazardous Task:
A task that could result in an incapacitating accident which renders the victim incapable of self help or summoning help.

Working Alone:
Any employee not working within eye sight or hearing, (no room or wall separations) for more than a few moments.

5.17.3 PROGRAM INFORMATION

Many jobs performed at Ames Laboratory are routine and have acceptable risks. The only risk generally associated with such tasks is the risk related to workers' physical condition (such as heart failure, stroke, etc.). This program will not address such situations.

5.17.3.1 Rules Applying to Working Alone

1. In the absence of supervisor approval, the following activities may not be performed alone during non standard hours:

   - Bulk dispensing, transferring, packaging or handling of chemicals (amount greater than routinely used/stored in a laboratory) such as:
     - Corrosives
     - Cryogenic materials
     - Hydrofluoric Acid
     - Pyrophoric materials
     - Radioactive materials
     - Poisonous gases
     - Waste cleanups or response to a spill or fire emergency

   - Electrical work or service on exposed electrical parts having greater than 50 volts
   - Trenching or excavation work
   - Hot work including welding, torching, brazing, etc. that must be performed without shielding, guarding or where combustibles and flammables are not further than 35 feet away. *(This does not apply to routine torch work such as that performed in laboratories for glass work or welding which is performed in the facilities shops.)*
   - Scaffolding, elevated platforms
   - Any Non - Permit Required Confined Space Entry (see Section 5.18 of this manual). At no time may someone enter a Permit Required Confined Space alone.
   - Working with or on machinery or equipment with guards missing or removed <u>unless the equipment is locked and tagged out of service</u>

2. Supervisors are responsible for reviewing and documenting those tasks which require two people. In those cases:

- At least two (2) employees familiar with the hazards and the equipment shall be present in the general area where work of a hazardous nature is present so that prompt and competent assistance can be provided in the case of an emergency. ESH&A is available for consultation.

- Employees performing tasks of a hazardous nature must be familiar with applicable emergency procedures (call 911, location of fire alarm activation pull stations, First Aid, etc).

- Employees performing tasks of a hazardous nature must be aware of the location of the nearest phone and have access in the event of an emergency.

5.17.3.2 Exemptions

1. Supervisors / managers may approve work in hazardous areas under non-hazardous conditions. ESH&A may be contacted for guidance in determining when a work activity to be performed could be deemed hazardous or non-hazardous under this procedure.

2. There are circumstances that warrant some general exemptions from the rules to the Working Alone Program. The situations and groups involved include:

- Working Alone in an office area.
- If no hazards are present in the normally hazardous area (no bulk chemical use, etc.) which has been authorized by the Supervisor or Manager prior to the activity. Examples include but is not limited to:

  - *Chemical* checking the progress of an experiment or the status of mechanical equipment and conditions (pumps, temperature, etc.), laboratory checks and tests, etc.
  - *Facilities Services Group* may need to come in to perform non-hazardous work for resolution of some type of condition.
  - *Plant Protection Personnel* perform walk throughs of the Ames Laboratory Buildings for security and safety issues.

5.17.4 TRAINING

Detailed programmatic information is provided via the following institutional training modules:

GENERAL EMPLOYEE TRAINING (GET) FOR NEW EMPLOYEES #AL-001	
Intended Audience:	*Mandatory for all workers whose job assignments involve Hazardous Tasks outside of peak business hours.*
Module Format:	*Working Alone is incorporated into General Employee Training (GET) which is classroom instruction. Estimated Time of Completion: 1.5 Hours*
Associated Retrain Period & Format:	*Retrain is required if an employee has been terminated from the Laboratory for more than a one-year period. All Ames Laboratory employees receive the Laboratory's Annual Retrain Mailing, which covers, Fire Safety, Cyber Security, Physical Security, informational updates and policy reminders.*

Group / activity-specific training shall be given to each employee prior to work that includes a discussion of physical hazards, chemical hazards, hazard mitigation, location of MSDSs and other safety information, emergency response measures and any other procedural information. This training shall be documented by the Supervisor / Group Leader / Department Manager.

5.17.5 PERFORMANCE CHECKLISTS

Supervisors / Group Leaders / Department Managers shall:

- ❑ Ensure principles outlined in this program are applied and followed.
- ❑ Review all jobs outside of peak hours to determine which tasks need special work procedures.
- ❑ Document the tasks requiring special work procedures.
- ❑ Make employees aware of Working Alone Program.
- ❑ Make employees aware of hazards involved in a task.
- ❑ Assure the job procedures accurately reflect actual job practices.
- ❑ Respond to employee safety concerns and correct unsafe conditions that may exist.

Employees shall:

- ❑ Attend General Employee Training as denoted on Employee Training Profile. Consult the Ames Laboratory/IPRT training schedule for the next available class.
- ❑ Perform all tasks in a safe manner.
- ❑ Review work procedures that outline the job and discuss any modification of these procedures with Supervisor/Group Leader/Manager.
- ❑ Fully adhere to the requirements set forth in the Working Alone Program.
- ❑ Utilize a second or buddy system while working in a hazardous location or working with hazards.

Environment, Safety, Health & Assurance (ESH&A) shall:

- ❑ Assist Supervisors/Group Leaders/Department Managers in evaluation of job tasks and designing safe work procedures.
- ❑ Periodically review and update the Working Alone Program.
- ❑ Conduct General Employee Training.

Working Alone Attendant (Buddy) shall:

- ❑ Provide assistance to employee working alone to ensure safety during controlled operation.
- ❑ Review work being performed to ensure familiarity of operations and hazards involved.
- ❑ Review duties of attendant including how to summon help and get worker out of danger without endangering yourself.
- ❑ Maintain audio or visual contact with employee performing activity.

5.18 CONFINED SPACE ENTRY PROGRAM

Applicability Statement: *This section applies to all employees and contractors entering confined spaces including but not limited to man holes, pressure vessels, tanks, boilers, etc.*

5.18.1 REFERENCES

OSHA 1910.146 Confined Space Entry
NIOSH Recommended Criteria for Working in Confined Spaces
Form 10200.097 Confined Space Entry Permit (Appendix C)
Form 46300.055 Pre-Entry Checklist for Non-Permit Required Confined Spaces (Appendix D)
Form 46400.042 Confined Space Entry Procedures – Training Statement (Appendix E)
Procedure 46300.010 Emergency Procedures
Plan 46300.001 Emergency Plan

5.18.2 BACKGROUND

The Confined Space Program is a program designed to prevent employees and contractors from encountering physical and atmospheric hazards in areas defined as confined spaces by OSHA. The program requires a survey to determine potential and actual hazards. These hazards include but are not limited to mechanical, engulfment, electrical and atmospheric (oxygen deficiency, toxic substances, flammables, etc.) After the survey is completed, the spaces are determined to be Permit Required Confined Spaces or Non Permit Required Confined Spaces. Training is required for employees and contractors who enter either.

Definitions:

Attendant means an individual trained to monitor the authorized entrants, initiate emergency activities, and perform duties assigned in the Confined Space Program.

Authorized Employee (Entrant) an individual trained and authorized to enter a confined space to perform duties assigned in the Confined Space.

Confined Space
- Is large enough and so configured that an employee can bodily enter and perform assigned work;
- Has limited or restricted means of entry and exit; and
- Is not designed for continuous occupancy.

Entry Permit means a written or printed document that is provided by the employer to allow and control entry into a permit space. Permits are kept in the ESH&A Office. See Appendix C for copy of Confined Space Entry Permit, Form #10200.097.

Non Permit Required Confined Space means a confined space that does not contain or have the potential to develop a hazardous atmosphere causing death or serious physical harm. A Non Permit Required Confined Space still requires a checklist, however the confined space may be entered without the use of a retrieval system and attendant provided that the space can be

maintained in a safe atmospheric condition. The checklists are kept in the ESH&A Office. See Appendix D for copy of Pre-Entry Checklist (Form # 46300.055) for Non-Permit Required Confined Spaces.

Hazardous atmosphere:
An atmosphere that may expose employees to the risk of death, incapacitation, impairment of ability to self-rescue (that is, escape unaided from a permit space), injury, or acute illness from one or more of the following causes:

- Flammable gas, vapor, or mist in excess of 10 percent of its lower flammable limit (LFL)
- Airborne combustible dust at a concentration that meets or exceeds its LFL
- Atmospheric oxygen concentration below 19.5 percent or above 23.5 percent
- Atmospheric concentration of any substance for which a dose or a permissible exposure limit is published in Subpart G, Occupational Health and Environmental Control, or in Subpart Z, Toxic and Hazardous Substances, which could result in employee exposure in excess of its dose or permissible exposure limit
- Any other atmospheric condition that is immediately dangerous to life or health.

NOTE: Dust concentrations may be approximated as a condition in which the dust obscures vision at a distance of 5 feet (1.52 m) or less.

NOTE: An atmospheric concentration of any substance that is not capable of causing death, incapacitation, impairment of ability to self-rescue, injury, or acute illness due to its health effects is not covered by this provision.

Hot Work Permit A written authorization by Ames Laboratory Facilities Services Group or ESH&A or designee to perform operations including welding, grinding, cutting, burning, heating, etc.

IDLH means Immediately Dangerous to Life or Health. Any condition that poses an immediate or delayed threat to life or health that would cause irreversible adverse health effects or that would interfere with an individual's ability to escape unaided.

Prohibited Condition Any condition in a permit-required space that is not allowed by the permit.

Retrieval System Equipment used including retrieval lines, chest or full body harness, wristlets and a lifting device (tri-pod) or anchor.

Testing means a process by which the hazards that may confront entrants of a confined space are identified and evaluated using a number of tools (monitoring equipment).

5.18.3 PROGRAM INFORMATION

5.18.3.1 General Safety Rules:

- All confined spaces will be evaluated annually to ensure proper hazard identification. Also, when new hazards are identified during regular confined space entry, the matrix will be revised.
- All spaces defined as Permit-Required Confined Spaces are identified and labeled:

"DANGER
CONFINED SPACE
PERMIT REQUIRED"

See Appendix A & B for location of Permit Required Confined Spaces

NOTE: All provisions of the Confined Space Entry Procedure must be thoroughly implemented prior to authorizing and issuing a permit for entry into any space identified and labeled as a Permit Required Confined Space.

- All spaces defined as Non-Permit Required Confined Spaces are identified and labeled:

"DANGER
CONFINED SPACE
AUTHORIZED PERSONNEL ONLY"

See Appendix A & B for location of Non-Permit Required Confined Spaces.

- Spaces identified in Research Areas (due to potential for staff turn over) will be labeled:

CONTACT ESH&A PRIOR TO ENTRY @ 4-2153

- If hazards arise within a non-permit required confined space, each employee must exit the space immediately. The space must be re-evaluated to determine whether it must be reclassified as a permit required confined space, then requiring a Permit.

- If hazards are generated as a result of the work being performed (i.e., hot work, cleaning with solvents, asbestos removal, etc.) in a non-permit required space, it must be re-classified as a permit required confined space, then requiring a Permit.

- Control of atmospheric hazards through forced air ventilation to control atmospheric hazards does not constitute elimination of the hazard. Anytime forced air ventilation is used to control an atmospheric hazard, the space is automatically deemed a Permit Required Confined Space. If the space was a non-permit space originally and ventilation is being used for comfort (temperature control), it will remain a non-permit required space.

5.18.3.2 Equipment Requirements:

The following equipment is supplied by Ames Laboratory and may be required to be used for entry into confined spaces dependent on circumstances which will be dictated in the permit:

- Atmospheric Testing and Monitoring Equipment
  1 - TMX412 Four Gas Monitor (Oxygen, Flammable Limits, Carbon Monoxide, Hydrogen Sulfide)
  3 – TMX410 Four Gas Monitor (Oxygen, Flammable Limits, Carbon Monoxide, Hydrogen Sulfide)

NOTE: These units are required to be inspected and calibrated monthly. It is the responsibility of ESH&A to perform the calibration.

- Ventilating equipment needed to obtain acceptable entry conditions
- Manhole ventilation unit
- Two-way radios to be used by the attendant and entrant
- Personal Protective Equipment for hazards which could not be engineered out:
  - Safety Glasses
  - Protective Clothing
  - Gloves
  - Hard Hats
  - Air Purifying Respirators

NOTE: SCBAs (Self Contained Breathing Apparatus) will not be used to enter a space which is not safe from atmospheric hazards. The space must be ventilated through the use of forced air equipment.

- Lighting equipment needed to enable employees to see well enough to work safely and to exit the space quickly in an emergency (flash lights);
- Barriers and shields as required to protect personnel from external hazards (Caution Tape, Traffic Cones, Chain & Stanchions);
- Equipment such as ladders, needed for safe entry and exit by authorized entrants;
- Rescue and emergency equipment including:
  - Tri-Pod with Winches
  - Harnesses
  - Lanyards
  - Wristlets
- Any other equipment deemed necessary for safe entry into and rescue from Permit Required Confined Spaces.

5.18.3.3 Site Preparation Procedure

Step	Action
1.	De-energize, lockout and tagout all mechanical hazards (such as agitators, motors, pumps, etc.) and electrical energy sources within or connected to the confined space per Procedure 5.12 Lockout/Tagout in the ESH&A Program Manual.
2.	Isolate the permit space from hazards such as nitrogen, steam, solvents, or other respiratory or asphyxiant hazards.
3.	Purge, inert, flush or ventilate the permit space to eliminate or control atmospheric hazards.
4.	Setup and stage pedestrian, vehicle or other barriers as necessary to protect entrants from external hazards.
NOTE	• Safeguards and Security is notified prior to entry into a permit required confined space and notified again upon exiting the space. This is a requirement on the Entry Permit (Form 10200.097). • Radio communication is maintained with Safeguards and Security. • Should rescue from a confined space become necessary, Safeguards and Security will notify the City of Ames Fire Department and Rescue. • Periodic rescue drills are performed with the City of Ames Fire Department and Rescue in association with Iowa State University.

5.18.3.4 Elements of a Confined Space Permit

The entry permit documents compliance and authorizes entry into a permit space. The entry permit must be completed prior to entry into the space. The following information is required for each permit:

Step	Action
1.	Date and time of entry
2.	Duration of entry
3.	Permit Space to be entered
4.	Permit Space Hazards (oxygen deficiency, flammable gases, mechanical hazards, electric shock, etc.)
5.	Purpose of entry
6.	Name(s) of authorized entrant
7.	Name of attendant *(Not required for Non-Permit Spaces)*
8.	Name of entry supervisor authorizing entry
9.	The measures taken to isolate and eliminate or control the permit space hazards.
NOTE	The protective measures may include Lockout/Tagout, purging, inerting, ventilating, flushing, blanking lines, two way radios, tripod and harness, lighting, PPE, alarms, testing equipment, etc.

Step	Action
10.	List of any other permits issued, isolation measures, or other hazards eliminated to facilitate the confined space entry.
11.	Rescue and Emergency Services (Plant Protection) must be notified prior to entry into Permit Required Confined Spaces with the following information: • Location • Time • Expected duration of the job • Name of Entrant • Name of Attendant • Expected hazards
12.	Rescue and Emergency Services (Plant Protection) must be notified upon exiting the confined space.
NOTE	The Attendant is to call Base 2, 4-5511 or 911 to activate Plant Protection in the event of a rescue.
13.	The communication procedures used by the authorized entrants and attendants to maintain contact during the entry.
14.	The acceptable entry conditions.
15.	Provide pedestrian, vehicle or other barriers as necessary to protect entrants from external hazards.
16.	Results of initial and periodic atmospheric monitoring to verify that conditions in the permit space are acceptable for entry throughout the duration of an authorized entry (document the instrument used and the date of last calibration).
17.	Any other information necessary to ensure employee safety during confined space entry.
18.	Print and sign the permit and return to ESH&A when complete.

5.18.3.5 Procedure for Entry into Permit Required Confined Spaces

Step	Action
1.	Complete Site Preparation Procedure. See Procedure 5.18.3.3 of this program.
2.	Document completion of protective measures taken on the Confined Space Permit.
3.	Monitor the atmosphere of the Confined Space before entry to ensure safety.
4.	Before entry begins, the entry Supervisor must evaluate and sign the entry permit to authorize entry.
NOTE	See Appendix C for a copy of Ames Laboratory Confined Space Entry Permit.
5.	Entry Supervisor must assess if entrant can bodily enter confined space to ensure unhindered rescue.
6.	Set the duration of the permit for the length of time required to do the job. The duration of the permit may not exceed the time required to complete the assigned task or job.
7.	The entry supervisor must terminate the entry and permit when: • The operations covered by the permit have been completed; or • Conditions that are not allowed under the entry permit arise in or near the permit space.
8.	Post the completed permit at the entry or immediate area of entry to confirm that the pre-entry preparations have been completed.
9.	After entry is complete, each permit is to be sent to ESH&A. Each permit is to be retained for at least 1 year to facilitate the review of the program. Any problems encountered during any entry must be noted on the permit.

5.18.3.6 Procedure for Rescue from a Permit Required Confined Spaces

Step	Action
NOTE	Ames Laboratory Employees are prohibited from entering a confined space to perform a rescue.
1.	Confined Space rescue for Ames Laboratory is to be performed only by non-entry (i.e., Tri-pod-winch-lanyard and harness, self removal from space, etc).
2.	In the event rescue is necessary in which entry is required, the Attendant must contact Plant Protection by Radio at Base 2, or call 911.
3.	Plant Protection is to contact the City of Ames Fire Department for rescue.
4.	An escort is to be established to direct the City of Ames Fire Department to the confined space location.
5.	Ames Laboratory ESH&A and FSG will provide necessary support to the FD.

NOTE: For non-permit required confined spaces, where there is no potential to develop a hazardous atmosphere, personnel can enter to assist an employee as long as the proper hazard assessment is done and procedures followed.

5.18.4 TRAINING

Detailed programmatic information is provided via the following institutional training modules:

CONFINED SPACE TRAINING	**#AL-023**
Intended Audience:	*Mandatory for all workers whose job assignment involves entry into a confined space which is:* • Large enough and so configured that an employee can bodily enter and perform assigned work • Has limited or restricted means of entry and exit • Is not designed for continuous occupancy • Has the potential to develop a hazardous atmosphere or condition • Labeled as a confined space by ESH&A See Appendix E for copy of On Site Instruction to be completed after Computer Based Training.
Module Format:	*Module is Computer Based Training with a exam and Job Specific Training using "Confined Space – Entry Procedures – Training Statement". Estimated completion time: 1.5 hours*
Associated Retrain Period & Format:	*Two Year Retrain*

Group / activity-specific training shall be given to each employee prior to work that includes a discussion of physical hazards, atmospheric hazards, hazard mitigation, emergency response measures, procedural information and other safety information. This training shall be documented by the Supervisor / Group Leader / Department Manager.

5.18.5 PERFORMANCE CHECKLISTS

Supervisors /Group Leaders / Department Managers shall:

- ❑ Ensure that all questions pertaining to the Confined Space Entry Program are appropriately answered for each employee on the Training Needs Questionnaire and that all hazards are denoted on the Hazard Inventory.
- ❑ Attend Confined Space Entry Training. Consult the Ames Laboratory/IPRT training schedule for the next available class.
- ❑ Ensure outside contractors performing work at the facility adhere to the Confined Space Entry Program.
- ❑ Notify ESH&A if a contractor requires entry into a confined space.
- ❑ Inform contractors coming on site of the Confined Space Program.
- ❑ Complete permits as necessary to enter confined spaces.
- ❑ Ensure employees know, understand and follow Confined Space Entry Program rules.
- ❑ Ensure protective equipment is available and in good working order.
- ❑ Monitor/supervise contract employees who have to enter a confined space to perform work duties.
- ❑ Apprise contractors of the hazards identified and experience with the confined spaces.

- ❑ Apprise contractors of precautions or procedures that Ames Laboratory has implemented for the protection of employee.
- ❑ Initiate progressive discipline when authorized employees fail to comply with the Confined Space Entry Program.
- ❑ Complete the Confined Space Entry Procedures – Training Statement. On site instruction to be completed after Computer Based Training. See Appendix E.

Attendant shall:
The following are the responsibilities of the employee whose duties as attendant involve ensuring the safety of the authorized entrant:

- ❑ Attend all required training.
- ❑ Evaluate hazards in the work area, chemicals, procedures, etc. including information on the mode, signs, or symptoms and consequences of the exposure hazards.
- ❑ Notify Plant Protection prior to entry into Permit Required Confined Space.
- ❑ Notify Plant Protection upon exiting the Permit Required Confined Space.
- ❑ Communicate with the Authorized Entrant to monitor entrant's status and alert entrant of the need to evacuate.
- ❑ Remain outside the permit space during entry operations until relieved by another attendant or operations are complete.
- ❑ Ensure Authorized Entrant wears Personal Protective Equipment corresponding to the hazards exposed to and listed on the permit.
- ❑ Ensure Authorized Entrant wears retrieval gear such as body harness and cable attached to Tri-Pod as required by the entry supervisor and noted on the permit.
- ❑ Avoid unsafe practices.
- ❑ Abort the entry if safety is compromised.
- ❑ Report unsafe conditions and practices of others to Supervisor/Group Leader/Manager or ESH&A and note on permit.
- ❑ Monitor the activities inside and outside the space to determine if it is safe for entrants to remain in the space.
- ❑ Order the authorized entrants to evacuate immediately under any of the following conditions:
  - A prohibited condition is detected;
  - Behavioral effects of hazardous exposure is detected;
  - A situation outside the space that could endanger the entrant;
  - The attendant cannot safely perform all the duties required.
- ❑ Summon rescue and other emergency services immediately upon determining entrant may need assistance to escape from permit space hazards.
- ❑ Take the following actions when unauthorized persons approach or enter a permit space while entry is underway:
  - Warn unauthorized persons that they are to stay away;
  - Advise unauthorized persons to exit immediately if they have entered the permit space;
  - Inform Supervisor / Group Leader or Manager and ESH&A of unauthorized persons entry.
- ❑ Perform non-entry rescues.
- ❑ Perform no duties that might interfere with attendant's primary responsibility to protect the authorized entrant.
- ❑ Monitoring multiple spaces is prohibited.
- ❑ Attend required course as denoted on Employee Training Profile. Consult the Ames Laboratory/IPRT training schedule for the next available class.
- ❑ Maintain confined space entry equipment.

- ❑ Fully adhere to the requirements set forth in the lockout/tagout program when installing, servicing and maintaining machinery and equipment.

Authorized Entrant shall:
The following are the responsibilities of the Authorized employee(s) entering a confined space:
- ❑ Attend all required training.
- ❑ Evaluate hazards in the work area, including pneumatic, hydraulic, mechanical, procedural, and information on the mode, signs, symptoms and consequences of exposure to a hazardous atmosphere.
- ❑ Communicate with the Attendant as necessary to enable the Attendant to monitor entrant status and alert entrant of the need to evacuate.
- ❑ Wear Personal Protective Equipment corresponding to the hazards listed on the permit.
- ❑ Wear retrieval gear such as body harness and cable attached to Tri-Pod or connecting point as listed on the permit as necessary.
- ❑ Avoid unsafe practices.
- ❑ Abort entry if unsafe condition and practices compromise entrant safety.
- ❑ Report unsafe conditions and practices of others to Facilitator or ESH and note on permit.
- ❑ Know the location of fire alarms and other emergency equipment.
- ❑ Evacuate the space whenever:
  - An order to evacuate is given by the attendant;
  - Any warning signs or symptoms or exposure to a dangerous situation;
  - The entrant detects a prohibited condition.

Environment, Safety, Health & Assurance (ESH&A) shall:
- ❑ Conduct periodic inspection of the Confined Space Entry Program at least annually to ensure that the procedures and requirements are being followed.
- ❑ Conduct random and annual inspections to ensure authorized employees are adhering to the Confined Space Entry Program.
- ❑ Develop and conduct Confined Space Entry Program Training and refresher training.
- ❑ Survey and evaluate all confined spaces for type, function, use, design, quantity, hazards, etc.
- ❑ Calibrate monitoring equipment prior to entry into Permit Required Confined Spaces.
- ❑ Participate with ISU to perform periodic rescue drill with the City of Ames Fire Department and Rescue (designated rescue service).
- ❑

Plant Protection shall:
- ❑ Dial 911 (Department of Public Safety / City of Ames) in the event rescue is necessary.
- ❑ Establish an escort to guide emergency services to the confined space.
- ❑ Contact ESH&A and FSG to provide ancillary support to emergency services.

Contractors shall:

- ❑ Follow Ames Laboratory Confined Space Entry Program or have a written program that meets this program.
- ❑ Debrief with Ames Laboratory Facilities Services Group or ESH&A at the conclusion of the entry operations regarding any hazards confronted or created in permit spaces during entry operations.
- ❑ Prohibit entry into a confined space unless employees have been trained and a written program has been reviewed and approved by Facilities Services Group or ESH&A.
- ❑ Supply their own confined space entry equipment.
- ❑ Show proof of training and a copy of their own Confined Space Entry Program to enter Permit Required Confined Spaces. Ames Laboratory Training can be made available to contractors (see 5.18.4 of this program).
- ❑ Enter Non-Permit Required Confined Spaces only after being made aware of hazards and have entry approved by Facilities Services Group or if accompanied by a Facilities Services Group Employee who is trained.
- ❑ Failure to comply with the Confined Space Entry Program shall subject the contractor to immediate discharge.

NOTE: Contractors are prohibited from entering a confined space without authorization from Facilities Services Group and ESH&A.

NOTE: ESH&A reserves the right to refuse contractor entry based on contractor qualifications.

Appendix A
Ames Laboratory External Confined Spaces

The current map of external confined spaces is available for viewing in the ESH&A Office (G40 TASF).

Appendix B
Ames Laboratory Confined Spaces

The current list of all Ames Laboratory Confined Spaces is available for viewing in the ESH&A Office (G40 TASF).

Appendix C - Section 5.18

AMES LABORATORY CONFINED SPACE ENTRY PERMIT

Form # 10200.097

Date:	Time:	Estimated Time of Expiration:	Actual Time of Completion:
Location and Description of Confined Space:			

Permit Space Hazards (Indicate Specific Hazards with Initials):

	Oxygen Deficiency (less than 19.5%)		Toxic Gases or Vapors (greater than PEL)
	Oxygen Enrichment (greater than 23.5%)		Mechanical Hazards
	Flammable Gases or Vapors (greater than 10% of LEL)		Electric Shock
	Airborne Combustible Dust (meets or exceeds LEL)		Engulfment
	Radiation		Other

Purpose of Entry:	
Name of Entrant(s):	Name of Attendant(s):
Comments:	

Special Requirements:	YES	NO	Special Requirements:	YES	NO
Lockout/Tagout			Tripod/Harness		
Lines Blanked			Additional Lighting (explosion proof)		
Additional Ventilation (purge)			Protective Clothing (gloves, suit, hard hat, etc.)		
Secure the Area			Hot Work Permit		
Communications / Radio			Other		

Entering a Permit Required Confined Space with a SCBA is Prohibited.

Atmospheric Testing Required Every Hours/Min(s)	Acceptable Levels	Before Entry	Re-Entry (Time)	Re-Entry (Time)	Entry Supervisors Initials	Employee Initials
Oxygen	19.5 – 23.5%					
% Lower Explosive Limit	<10 %					
Carbon Monoxide	<20 PPM					
Hydrogen Sulfide	<5 PPM					
Other:						
Instrument Used:		Serial #:		Date of Last Calibration:		

Plant Protection Office Notified Prior To Entry	Yes	No
Plant Protection Office Notified Upon Completion of Confined Space Entry	Yes	No

The work and safety precautions authorized by this permit have been reviewed. Instructions, safety procedures and appropriate MSDS's have been received and are understood. This permit is not valid unless all appropriate items are completed.

Name of Person Conducting Testing:	
Print:	Signature:
Supervisor or ESH&A Authorizing Entry:	
Print:	Signature:
Entrant Reviewed and Approved Atmospheric Monitoring and Safety Precautions:	
Print:	Signature:

EMERGENCY ACTIONS

Entrant(s): shall immediately self evacuate if a hazard is detected or perceived or directed by Attendant.
Attendant(s): shall summon emergency assistance by two-way radio (BASE 2) or by telephone (911) or (4-5511). The attendant shall not, under any circumstances, enter the confined space to attempt a rescue.

Post Permit At Site - Send Permit To ESH&A After Entry Is Complete

Appendix D

PRE-ENTRY CHECKLIST FOR NON-PERMIT REQUIRED CONFINED SPACES
Form # 46300.055

NAME OF CONFINED SPACE: _____ DATE:_____

CHECKLIST COMPLETED BY: _____

DO NOT USED THIS FORM IF SPACE IS POSTED:

DANGER
CONFINED SPACE
PERMIT REQUIRED

IF POSTED AS ABOVE, DO NOT ENTER AND CONTACT SUPERVISOR.

MINIMUM CONDITIONS FOR ENTRY

If the specified conditions are met, and hazard control is verified on this checklist, then one or more persons may enter the confined space without an entry permit and an attendant (stand-by person). **If the specified conditions cannot be met and/or hazard control cannot be verified, DO NOT ENTER** the space becomes a **PERMIT REQUIRED CONFINED SPACE** and cannot be safely entered without further hazard evaluation and control. Contact immediate supervisor for assistance.

VERIFICATION OF HAZARD CONTROL				
HAZARD	**METHOD/MEANS OF HAZARD CONTROL**	**HAZARD ELIMINATED?** (Circle appropriate response then initial.)		
1. Engulfment Hazards?	Have all engulfment hazards been eliminated? (Engulfment means the surrounding and effective capture of a person by liquid or finely divided solid substance that can be aspirated to cause death by filling or plugging the respiratory system or can exert enough force on the body to cause death by strangulation, constriction, or crushing.)	N/A	YES	NO
2. Entrapment Hazards?	Have all entrapment hazards been eliminated? (Any internal configuration such that an entrant could be trapped or asphyxiated by inwardly converging walls or by a floor which slopes downward and tapers to a smaller cross-section.)	N/A	YES	NO
3. Hazardous Energies?	Have all hazardous energies (exposed electrical conductors and moving machinery) been secured and locked/tagged out?	N/A	YES	NO
4. Hazardous Atmosphere?	Will work being performed introduce any substances or processes which could produce a hazardous atmosphere? (Non-permit spaces, by themselves, have been determined to not have hazardous atmospheres nor the potential for developing one if left to its own devices.)	N/A	YES	NO
5. Permit Required?	If any of items 1 through 3 are "NO" OR If item 4 is "YES". **AN ENTRY PERMIT IS REQUIRED.** **STOP! DO NOT ENTER SPACE. NOTIFY SUPERVISOR**		YES	NO

Appendix E – Section 5.18

CONFINED SPACE ENTRY PROCEDURES - TRAINING STATEMENT
Form # 45400.042

Name: _____ **Employee Number:** _____

Address: _____ **Phone Number:** _____

Part I. Institutional Training Verification: *This section is to be completed by an ESH&A Staff Member who provided the training:*

The above listed employee has completed the computer based training on *Confined Space Entry Procedures.*

_____ _____
ESH&A Staff Member's Signature Date

Part II. Job (Activity) Specific Training Verification: *This section is to be completed by the supervisor who oversees the confined space work activity:*

As an employee working in a Confined Space, I:

1) clearly understand the Confined Space Entry Policy requirements as outlined in Section 5.18 of the ESH&A Program Manual (46400.002).

2) have been provided Job (activity) Specific Training on the Confined Space Entry Procedures for the Activities listed below. *(Please note that the supervisor is responsible for keeping the below list current.)*

Description of Confined Space Activity	Location	Is a Permit required? (Y or N)

3) am aware that it is my responsibility to inspect all Confined Space Equipment prior to use to guarantee that it is in good working condition.

4) have familiarized myself with the associated Emergency Response Plan should a rescue become necessary.

5) understand all entry requirements of a Permit-Required Confined Space (if applicable).

All items listed in **Part II** have been completed. Please enter the successful completion of Confined Space Training (Module AL-023) on the Ames Laboratory Training Records System (ALTRS).

_____ _____
Employee's Signature Date

_____ _____ _____
Group/Supervisor's Signature Phone Number Date

It is the responsibility of the Ames Laboratory employee and their supervisor to complete the items indicated above and to return the **original**, signed Confined Space Training Statement to Environment, Safety, Health & Assurance, **125 Spedding, prior** to working in a confined space.

Note to Supervisor: *Maintain a copy of this record in your Job (Activity) Specific Training Files.*

5.19 FALL PROTECTION (ELEVATED WORK – PLATFORMS AND ROOF WORK)

Applicability Statement: *This section applies to all employees and contractors when working at dangerous heights of 6 feet or greater (platforms, roof work, mezzanines, etc.*

5.19.1 REFERENCES

29 CFR 1910.23 Guarding Floor and Wall Openings and Holes
29 CFR 1926.500-503 Fall Protection in Construction
ANSI A12.1-67 Safety Requirements for Floor and Wall Openings, Railings and Toe Boards

5.19.2 BACKGROUND

The purpose of this program is to provide information and guidance on safety precautions when working at dangerous heights. This includes any work area which has a potential for a fall of six (6') feet or greater (i.e. platforms, roof work, etc.).

This procedure does not apply to:

- Employees making an inspection, investigation, or assessment of workplace conditions prior to the actual start of construction work or after all construction work has been completed.
- Ladders (refer to Section 5.15)
- Scaffolding (refer to Section 5.13)
- Vehicle Mounted Elevating And Rotating Work Platforms (refer to Section 5.4)

5.19.3 PROGRAM INFORMATION

5.19.3.1 Definitions

Anchorage Point: A secure point for attachment for lifelines, lanyards, or deceleration devices.

Body Harness: Strap webbing body device designed to distribute the fall arrest forces over at least the thighs, pelvis, waist, chest and shoulders, attached to a personal fall arrest system.

NOTE: Body belts **are prohibited** as a method of fall protection. A full body harness must be utilized.

Connector: A device which is used to couple (connect) parts of the personal fall arrest system and positioning device systems together. It may be an independent component of the system, such as a carabiner or buckle or D-ring sewn into a body harness, or a snap-hook spliced or sewn to a lanyard or self-retracting lanyard).

Controlled Access Zone (CAZ): An area in which certain work (e.g., overhand bricklaying) may take place without the use of guardrail systems, personal fall arrest systems, or safety net systems and access to the zone is controlled.

Dangerous Equipment: Equipment (such as pickling or galvanizing tanks, degreasing units, machinery, electrical equipment, and other units) which, as a result of form or function, may be hazardous to employees who fall onto or into such equipment.

Dangerous Heights: Any work area which has a potential for a fall six (6) feet or greater where guardrails, mid rails and other protection devices do not exist to prevent a fall.

Deceleration Device: Any mechanism, such as a rope grab, rip-stitch lanyard, specially-woven lanyard, tearing or deforming lanyards, automatic self-retracting lifelines/lanyards, etc., which serves to dissipate a substantial amount of energy during a fall arrest, or otherwise limit the energy imposed on an employee during fall arrest.

Deceleration Distance: The vertical distance a falling employee travels, excluding lifeline elongation and free fall distance, before stopping, from the point at which the deceleration device begins to operate. It is measured as the distance between the location of an employee's body harness attachment point at the moment of activation (at the onset of fall arrest forces) of the deceleration device during a fall, and the location of that attachment point after the employee comes to a full stop.

Guardrail System: A barrier erected to prevent employees from falling to lower levels.

Hole: A gap or void 2 inches or more in its least dimension, in a floor, roof, or other walking/working surface.

Infeasible: Is impossible to perform the construction work using a conventional fall protection system (i.e., guardrail system, safety net system, or personal fall arrest system) or that it is technologically impossible to use any one of these systems to provide fall protection.

Lanyard: A flexible line of rope, wire rope, or strap which generally has a connector at each end for connecting the body harness to a deceleration device, lifeline, or anchorage.

Leading Edge: The edge of a floor, roof, or form work for a floor or other walking/working surface (such as the deck) which changes location as additional floor, roof, decking, or form work sections are placed, formed, or constructed. A leading edge is considered to be an "unprotected side and edge" during periods when it is not actively and continuously under construction.

Lifeline: Components consisting of a flexible line for connection to an anchorage at one end to hang vertically (vertical lifeline) or for connection to anchorages at both ends to stretch horizontally (horizontal lifeline) and serve as a means for connecting other components of a personal fall arrest system to the anchorage.

Low-Slope Roof: A roof having a slope less than or equal to 4 in 12 (vertical to horizontal).

Opening: A gap or void 30 inches or more high and 18 inches or more wide, in a wall or partition, through which employees can fall to a lower level.

Personal Fall Arrest System: A system used to arrest an employee in a fall from a working level. It consists of an anchorage, connectors, a body harness and may include a lanyard, deceleration device, lifeline, or suitable combinations of these.

NOTE: As of January 1, 1998, the use of a body belt for fall arrest is prohibited.

Rope Grab: A deceleration device which travels on a lifeline and automatically, by friction, engages the lifeline and locks so as to arrest the fall of an employee. A rope grab usually employs the principle of inertial locking, cam/level locking, or both.

Safety-Monitoring System: A safety system in which a competent person is responsible for recognizing and warning employees of fall hazards.

Self-Retracting Lifeline/Lanyard: A deceleration device containing a drum-wound line which will automatically lock after the onset of a fall and arrests the fall.

Snap-Hook: A hook shaped connector with a self closing, self locking keeper, which remains closed and locked until unlocked and pressed open for connection or disconnection.

Unprotected Sides and Edges: Any side or edge (except at entrances to points of access) of a walking/working surface, e.g., floor, roof, ramp, or runway where there is no wall or guardrail system at least 39 inches high.

Walking/Working Surface: Any surface, whether horizontal or vertical on which an employee walks or works, including, but not limited to, floors, roofs, ramps, bridges, runways, form work and concrete reinforcing steel but not including ladders, vehicles, or trailers, on which employees must be located in order to perform their job duties.

Warning Line System: A barrier erected on a roof to warn employees that they are approaching an unprotected roof side or edge, and which designates an area in which roofing work may take place without the use of guardrail, or safety net systems to protect employees in the area.

Work Area: That portion of a walking/working surface where job duties are being performed.

Unprotected Sides and Edges: A walking/working surface (horizontal and vertical surface) with an unprotected side or edge which is 6 feet (1.8 m) or more above a lower level shall be protected from falling by the use of guardrail systems, safety net systems, or personal fall arrest systems.

5.19.3.2 Fall Protection Requirements:

Fall protection is required for employees exposed to falls of six (6) feet or greater at unprotected sides and edges, leading edges, walking and working surfaces, wall openings, hoists areas, holes, skylights, ramps, runways, excavations and when working above dangerous equipment.

Protection must be provided with the use of guardrail systems, personal fall arresting systems, warning line systems or safety monitoring systems.

The following is an index to specific Fall Protection Requirements:

Section	Title
5.19.3.3	Guardrail Systems
5.19.3.4	Personal Fall Arrest Systems
5.19.3.5	Warning Line Systems
5.19.3.6	Safety Monitoring Systems
5.19.3.7	Hoisting Areas
5.19.3.8	Covers
5.19.3.9	Exception to the above mentioned fall protection. Written Fall Protection Plan
5.19.3.10	Inspection of Equipment

NOTE: Safety Net Systems and Position Devices Systems will not be addressed in this program. Contact ESH&A if such systems are warranted.

5.19.3.3 Guardrail System Requirements

- Top edge height of top rails, or equivalent guardrail system members, shall be 42 inches plus or minus 3 inches above the walking/working level. When conditions warrant, the height of the top edge may exceed the 45-inch height, provided the guardrail system meets all other criteria.

- Mid rails, screens, mesh, intermediate vertical members, or equivalent intermediate structural members shall be installed between the top edge of the guardrail system and the walking/working surface when there is no wall or parapet wall at least 21 inches (53 cm) high.

- Mid rails, when used, shall be installed at a height midway between the top edge of the guardrail system and the walking/working level.

- Screens and mesh, when used, shall extend from the top rail to the walking/working level and along the entire opening between top rail supports.

- Intermediate members (such as balusters), when used between posts, shall be not more than 19 inches apart.

- Guardrail systems shall be capable of withstanding, without failure, a force of at least 200 pounds applied within 2 inches of the top edge, in any outward or downward direction, at any point along the top edge.

- When the 200 pound test load is applied in a downward direction, the top edge of the guardrail shall not deflect to a height less than 39 inches above the walking/working level.

- Mid rails, screens, mesh, intermediate vertical members, solid panels, and equivalent structural members shall be capable of withstanding, without failure, a force of at least 150 pounds applied in any downward or outward direction at any point along the mid rail or other member.

- Guardrail systems shall be so surfaced as to prevent injury to an employee from punctures or lacerations, and to prevent snagging of clothing.

- The ends of all top rails and mid rails shall not overhang the terminal posts, except where such overhang does not constitute a projection hazard.

- Top rails and mid rails shall be at least one-quarter (1/4") inch nominal diameter or thickness to prevent cuts and lacerations. If wire rope is used for top rails, it shall be flagged at not more than 6-foot intervals with high-visibility material.

- When guardrail systems are used at hoisting areas, a chain, gate or removable guardrail section shall be placed across the access opening between guardrail sections when hoisting operations are not taking place.

- When guardrail systems are used at holes, they shall be erected on all unprotected sides or edges of the hole.

Manila, plastic or synthetic rope being used for top rails or mid rails shall be inspected as frequently as necessary to ensure that it continues to meet the strength requirements.

5.19.3.4 Personal Fall Arresting System Requirements

- When engineering controls are not feasible in the work area, a personal fall arrest system may be used. The fall arrest system is designed to stop a worker from free falling at a distance of six (6) feet. Personal fall arresting system components are listed below:

- D-rings and snap hooks shall have a minimum tensile strength of 5,000 pounds.

- Snap hooks shall be sized to be compatible with the member to which they are connected to prevent unintentional disengagement of the snap hook.

NOTE: Effective January 1, 1998 only locking type snap hooks shall be used.

- Unless the snap hook is a locking type and designed for the following connections, snap hooks shall not be engaged:

  - directly to webbing, rope or wire rope
  - to each other
  - to a D-ring to which another snap hook or other connector is attached
  - to a horizontal lifeline, or
  - to any object which is incompatibly shaped or dimensioned in relation to the snap hook such that unintentional disengagement could occur by the connected object being able to depress the snap hook keeper and release itself.

- Horizontal lifelines shall be designed, installed, and used, under the supervision of a qualified person, as part of a complete personal fall arrest system.

- Lanyards and vertical lifelines shall have a minimum breaking strength of 5,000 pounds.

- When vertical lifelines are used, each employee shall be attached to a separate lifeline.

- Lifelines shall be protected against being cut or abraded.

- Self-retracting lifelines and lanyards which automatically limit free fall distance to 2 feet or less shall be capable of sustaining a minimum tensile load of 3,000 pounds applied to the device with the lifeline or lanyard in the fully extended position.

- Self-retracting lifelines and lanyards that do not limit a free fall distance to 2 feet or less, rip-stitch lanyards, tearing and deforming lanyards shall be capable of sustaining a minimum tensile load of 5,000 pounds.

- Anchorages used for attachment of personal fall arrest equipment shall be independent of any anchorage being used to support or suspend platforms and capable of supporting at least 5,000 pounds per employee attached.

- The attachment point of the body harness shall be located in the center of the wearer's back near shoulder level, or above the wearer's head.

- Personal fall arrest systems and components subjected to impact loading shall be immediately removed from service and shall not be used again for employee protection until inspected and determined by a competent person to be undamaged and suitable for reuse.

- Personal fall arrest systems shall be inspected prior to each use for wear, damage and other deterioration, and defective components shall be removed from service.

- Personal fall arrest systems shall not be attached to guardrail systems nor shall they be attached to hoists.

- When a personal fall arrest system is used at hoist areas, it shall be rigged to allow the movement of the employee only as far as the edge of the walking/working surface.

5.19.3.5 Warning **Line System Requirements**

Warning line systems and their use shall comply with the following:

- The warning line shall be erected around all sides of the roof work area.
- When mechanical equipment is not being used, the warning line shall be erected not less than 6 feet from the roof edge.
- When mechanical equipment is being used, the warning line shall be erected not less than 6 feet from the roof edge that is parallel to the direction of mechanical equipment operation and not less than 10 feet from the roof edge that is perpendicular to the direction of mechanical equipment operation.
- Points of access, materials handling areas, storage areas, and hoisting areas shall be connected to the work area by an access path formed by two warning lines.
- When the path to a point of access is not in use, a rope, wire, chain, or other barricade, equivalent in strength and height to the warning line, shall be placed across the path at the point where the path intersects the warning line erected around the work area or the path shall be offset such that a person cannot walk directly into the work area.
- Warning lines shall consist of ropes, wires, or chains, and supporting stanchions erected as follows:
  - The rope, wire, or chain shall be flagged at not more than 6-foot intervals with high-visibility material;
  - The rope, wire, or chain shall be rigged and supported in such a way that its lowest point (including sag) is no less than 34 inches from the walking/working surface and its highest point is no more than 39 inches from the walking/working surface;
  - After being erected, with the rope, wire, or chain attached, stanchions shall be capable of resisting, without tipping over, a force of at least 16 pounds (71 N) applied horizontally against the stanchion, 30 inches (.8 m) above the walking/working surface, perpendicular to the warning line, and in the direction of the floor, roof, or platform edge;
  - The rope, wire, or chain shall have a minimum tensile strength of 500 pounds and after being attached to the stanchions, shall be capable of supporting, without breaking, the loads applied to the stanchions;
  - The line shall be attached at each stanchion in such a way that pulling on one section of the line between stanchions will not result in slack being taken up in adjacent sections before the stanchion tips over.

- No employee shall be allowed in the area between a roof edge and a warning line unless the employee is performing roofing work in that area.

- Mechanical equipment on roofs shall be used or stored only in areas where employees are protected by a warning line system, guardrail system, or personal fall arrest system.

5.19.3.6 Safety Monitoring Systems

Safety monitoring systems and their use shall comply with the following:

- A competent person shall be designated to monitor the safety of other employees. The safety monitor shall:

  - be competent to recognize fall hazards
  - warn the employee when it appears that the employee is unaware of a fall hazard or is acting in an unsafe manner
  - be on the same walking/working surface and within visual sighting distance of the employee being monitored
  - be close enough to communicate orally with the employee, and
  - not have other responsibilities that could take the monitor's attention from the monitoring function.

- No employee, other than an employee engaged in roofing work [on low-sloped roofs] or an employee covered by a fall protection plan, shall be allowed in an area where an employee is being protected by a safety monitoring system.

- Each employee working in a Controlled Access Zone shall be directed to comply promptly with fall hazard warnings from safety monitors.

5.19.3.7 Hoisting Areas

Safety monitoring systems and their use shall comply with the following:

- Each employee in a hoist area shall be protected from falling 6 feet or more to lower levels by guardrail systems or personal fall arrest systems. If guardrail system, chain, gate, or guardrail are removed to facilitate the hoisting operation (e.g., during landing of materials) and an employee must lean through the access opening or out over the edge of the access opening to receive or guide equipment and materials, a personal fall arrest system shall be used.

5.19.3.8 Covers

Cover for holes in floors, roofs and other walking/working surfaces shall comply with the following:

- Covers located in roadways and vehicular aisles shall be capable of supporting, without failure, at least twice the maximum axle load of the largest vehicle expected to cross over the cover.
- All other covers shall be capable of supporting, without failure, at least twice the weight of employees, equipment, and materials that may be imposed on the cover at any one time.
- All covers shall be secured when installed so as to prevent accidental displacement by the wind, equipment, or employees.
- All covers shall be color coded or they shall be marked with the word "HOLE" or "COVER" to provide warning of the hazard.

NOTE: This provision does not apply to cast iron manhole covers or steel grates used on streets or roadways.

5.19.3.9 Written Fall Protection Plan

- This option is available only to employees engaged in leading edge work, precast concrete erection work, or residential construction work and who can demonstrate that it is infeasible or it creates a greater hazard to use conventional fall protection equipment. The Fall Protection Plan must conform to the following provisions:
  - The Fall Protection Plan shall document the reasons why the use of conventional fall protection systems (guardrail systems, personal fall arrest systems, or safety nets systems) are infeasible or why their use would create a greater hazard.
  - The Fall Protection Plan shall be prepared by a qualified person and developed specifically for the site where the leading edge work, precast concrete work, or residential construction work is being performed. The Fall Protection Plan must be developed, reviewed and implemented using the Readiness Review Process.
  - Any changes to the Fall Protection Plan shall be approved by a qualified person.
  - A copy of the Fall Protection Plan with all approved changes shall be maintained at the job site and the plan must be maintained up to date.
  - The implementation of the Fall Protection Plan shall be under the supervision of a competent person.

- The fall protection plan shall include a written discussion of other measures that will be taken to reduce or eliminate the fall hazard for workers who cannot be provided with protection from the conventional fall protection systems. For example, the employer shall discuss the extent to which scaffolds, ladders, or vehicle mounted work platforms can be used to provide a safer working surface and thereby reduce the hazard of falling.

- The fall protection plan shall identify each location where conventional fall protection methods cannot be used. These locations shall then be classified as controlled access zones.

- The fall protection plan must include a statement that identifies each employee who is designated to work in controlled access zones. No other employees may enter controlled access zones.

5.19.3.10 Inspections

Prior to use, components of all fall protection systems (guardrail, fall arresting systems, warning line systems, etc.) shall be inspected for wear, damage and other deterioration to ensure the equipment is in safe working order. Equipment in need of repair must be removed from service and replaced immediately.

5.19.4 TRAINING

Detailed programmatic information is provided via the following institutional training modules:

FALL PROTECTION TRAINING	**#AL-145**
Intended Audience:	*Mandatory for all Ames Laboratory Facilities Services Employees*
Module Format:	*Module is Video with discussion of Section 5.19 of the ESH&A Program Manual and presentation of fall arresting equipment.*
Associated Retrain Period & Format:	• *Retrain is required every three (3) years*

Group / activity-specific Fall Protection Training shall be given to each employee prior to start of work. Training will include a discussion of physical hazards, hazard mitigation, emergency response measures, procedural information and other safety information. The training shall be documented by the Supervisor, Group Leader or Department Manager.

5.19.5 PERFORMANCE CHECKLISTS

Supervisors / Group Leader / Department Manager shall:

- ❑ Conduct routine inspection to ensure all walking and working surfaces are free from slip, trip and fall hazards.
- ❑ Ensure equipment including guardrails, fall arresting equipment, ladders, scaffolding etc. are in good working order.
- ❑ Enforce the ESH&A procedures in this manual.
- ❑ Communicate and explain the need for compliance with this and all ESH&A Programs.

Employees shall:

- ❑ Maintain work areas free from slip, trip and fall hazards.
- ❑ All employees are expected to observe and follow the established procedures in this program and all ESH&A Programs.
- ❑ Bring all unsafe acts, practices, or conditions to their coworker's attention.
- ❑ Attend Fall Protection Training.
- ❑ If employees are unable to get an unsafe situation corrected, they must inform their Supervisor/Group Leader/Department Manager or ESH&A.

Environment, Safety, Health and Assurance shall:

- ❑ ESH&A will conduct training as necessary for understanding of these procedures.
- ❑ Develop, implement and periodically review and update the fall protection program.

5.20 EXCAVATING AND TRENCHING PROGRAM

Applicability Statement: *This section applies to all employees and contractors entering excavations and trenches.*

5.20.1 REFERENCES

- OSHA 1926.650 Excavations
- OSHA 1926.651 General Requirements
- OSHA 1926.652 Requirements of Protective Systems
- OSHA 1910.146 Confined Space Entry

5.20.2 BACKGROUND

The purpose of this program is to ensure protection of Ames Laboratory employees from health and safety hazards associated with opening, entering and terminating an excavation.

5.20.3 PROGRAM INFORMATION

5.20.3.1 General Excavation Program Requirements

- Utility companies must be contacted at least 48 hours prior to excavating (excluding weekends and holidays). Excavating can proceed after 48 hours if utility companies cannot respond within that time period or cannot establish the exact location of installations (sewer, telephone, fuel, electric, water lines, etc.) with ESH&A and Facilities Services approval. Detection equipment or other acceptable means to locate utility installations are still required.

- All trenches exceeding 48 inches in depth must be properly shored or the sides must be sloped and/or benched. See Appendix A for OSHA Guidelines for proper sloping and benching and Appendix B for OSHA Guidelines for proper shoring.

- Before beginning excavation activities, the proposed depth of the excavation must be ascertained. All excavations 48 inches or greater in depth are considered a Permit Required Confined Space and all provisions of the program pertain. (See Section 5.18 of the ESH&A Manual Confined Space Program)

- When excavation operations approach the estimated location of underground utility installations, the exact location of the installation must be determined by non-conducting shovels, poles, detection equipment, or other safe and reliable means. Consult with ESH to proceed.

- While an excavation is open, underground installations must be protected, supported or removed as necessary to protect employees.

- A stairway, ladder, ramp or other safe means of egress must be located within 25 feet of the work in trench excavations greater than 4 feet in depth.

- Employees exposed to vehicular traffic must be provided with and must wear warning vests. (Contractors are responsible for providing their own warning vests.)

- Employees are prohibited underneath loads handled by lifting or digging equipment. Employees must be required to stand away from any vehicle being loaded or unloaded to avoid being struck by spillage or falling materials.

- Hard hats must be worn by all employees in and around the excavation area and the lifting and digging equipment.

- A warning system must be utilized including barricades, hand or mechanical signals, stop logs or alarms when mobile equipment is operated adjacent to an excavation in which the operator does not have a clear and direct view.

- Employees are prohibited from crossing or passing over a trench unless walkways or bridges are provided with standard guardrails.

- Physical protection must be provided at all remote excavations or the excavations must be back-filled immediately upon completion.

- Employees must be protected from falling material at the edge of the excavation by placing the spoil (excavated dirt, sand, rock, etc.) and tools a minimum of 2 feet away from the edge of the excavation.

- If Hot Work is to be performed, a Hot Work Permit must be completed in conjunction with atmospheric monitoring. (See Section 8 of the ESH&A Program Manual Hot Work Permit Program.).

5.20.3.2 Atmospheric Testing Requirements

- Trench excavations greater than 4 feet in depth require initial and periodic atmospheric monitoring.

- An excavation with an oxygen level of less than 19.5% or greater than 21.5% may not be entered.

- Excavations with an atmospheric concentration of a flammable gas in excess of 20% of the lower flammable limit may not be entered until adequate ventilation lowers the gas concentration below the LEL.

- Monitoring must be performed continuously either by a monitor operated above the excavation or a unit worn by the employee(s) entering the excavation as dictated by ESH&A.

5.20.3.3 Protective Requirements from Hazards generated by Water Accumulations

- Employees are prohibited from working in excavations with standing water unless precautions including special support systems or shield systems to protect from cave-ins are provided.

- If water removal equipment is used, the equipment must be monitored by a competent person (see Appendix E for list of designated competent persons).

- If excavation work interrupts the natural drainage of surface water such as dikes, streams, diversions ditches, etc. precautions must be taken to prevent surface water from entering the excavation.

- Excavations subject to runoff from heavy rains require an inspection by a competent person before entering.

5.20.3.4 Inspection Requirements

- Inspect entire excavation at beginning of each shift prior to entry and work around the excavation.

- The inspection is to be conducted by a designated competent person (listed as Authorized Supervisors-see Appendix E for list of designated competent persons).

- Inspection must also be performed after a rain storm.

- The competent person must immediately evacuate employees until all necessary precautions are taken when discovering evidence of:
  - possible failure of support systems or cave-ins
  - hazardous atmospheres
  - hazards generated outside the excavation
  - other hazardous conditions

5.20.3.5 Criteria for Sloping and/or Benching Systems

1. Because Ames Laboratory Soil is Type B, all sloping will be done at a 1 to 1 ratio. For every foot of rise, the slope will have one foot of horizontal fall.

2. The maximum bench height must be no greater than 3.5 feet rise with the horizontal distance being the same.

3. Benching and sloping are approved for use with each other.

4. Sloping is approved to be used in conjunction with Support Systems.

5. Excavations 20 feet or greater in depth are prohibited.

6. Employees are prohibited from working on faces of sloped or benched levels above other employees unless adequately protected from falling, rolling or sliding material.

NOTE: See Appendix A for Slope Configurations.

5.20.3.6 Criteria for Shoring Protective Systems

- Manufactured shoring must be free from damage or defects that will impair proper function.
- Manufactured shoring must be used and maintained in a manner intended by the manufacturer.
- Members of support systems must be securely connected to prevent sliding, falling, kick-outs, etc.
- Systems must not be installed or removed with employees in the excavation/trench.
- If members of a shoring system must be temporarily removed, additional precautions must be taken to ensure safety of employees (removal of members may occur only after employees evacuate the excavation zone).
- Removal of shoring must begin and progress from the bottom and must be released slowly looking for possible failure resulting in cave-in of sides of the excavation.
- Backfill must follow immediately after removal of shoring.

Note: Contact ESH&A for Aluminum Hydraulic Spacing and Installation for equipment and spacing requirements.

5.20.3.7 Criteria for Timber Shoring

- Appendix B (tables) must be used when shoring with timbers.

- When any of the following conditions are present, the members specified in the tables are not adequate. Alternate timber shoring must be designed by a Professional Engineer or another type of protective system designed according to 29 CFR 1926.652:
  - When loads imposed by structures or by stored material adjacent to the trench weigh in excess of the load imposed by a two-foot soil surcharge;
  - When vertical loads imposed on cross braces exceed 240-pound gravity load distributed on a one-foot section of the center of the cross-brace;
  - When surcharge loads are present from equipment weighing in excess of 20,000 pounds;
  - When only the lower portion of a trench is shored and the remaining portion of the trench is sloped or benched unless:
    a) the sloped portion is sloped at an angle less steep than 3 horizontal to 1 vertical; or
    b) the members are selected from the tables for use at a depth which is determined from the top of the overall trench, and not from the toe of the sloped portion.

- Mud sills must be used in trenches 2.5 feet or greater in depth.

- When the vertical spacing of cross-braces is four feet, place the top cross brace no more than 2 feet below the top of the trench.

- When the vertical spacing of cross-braces is five feet, place the top cross-brace no more than 2.5 feet below the top of the trench.

See Appendix B for Timber Spacing and Installation Requirements.

See Appendix C for OSHA Guidelines for Combination Shoring and Sloping Configuration.

See Appendix D for Schematic of Trench Jacks and Trench Shields.

5.20.4 TRAINING

Detailed programmatic information is provided via the following institutional training modules:

EXCAVATION and TRENCHING TRAINING **Will be developed prior to excavating & trenching.** *(This activity is very infrequent and as such is not a documented module).*	
Intended Audience:	*Mandatory for all workers whose job assignments involve working in or near an excavation.*
Module Format:	*Module will include a video, classroom instruction and site training. This activity is very infrequent and as such is not a documented module.* *Training will cover:* • *OSHA Guidelines* • *Equipment* • *Procedures* • *Authorization* • *Etc.*
Associated Retrain Period & Format:	*No Retrain*

Group / activity-specific training shall be given to each employee prior to work that includes a discussion of chemical hazards, hazard mitigation, location of MSDS's and other safety information, emergency response measures and any other procedural information. This training shall be documented by the Group Leader / Department Manager.

5.20.5 PERFORMANCE CHECKLISTS

Supervisors/Group Leaders/Department Managers shall:

- ❑ Know and follow the Excavation Program.
- ❑ Ensure employees know, understand and follow the Excavation Program.
- ❑ Ensure protective equipment is available and in good working order.
- ❑ Notify ESH&A if a contractor requires entry into a confined space.
- ❑ Monitor/supervise contract employees who have to enter a confined space to perform work duties.
- ❑ Apprise contractors of the hazards identified and experience with the excavation.
- ❑ Apprise contractors of precautions or procedures that Ames Laboratory has implemented for the protection of employees.
- ❑ Initiate progressive discipline per when authorized employees fail to comply with the Excavation Program.

Authorized Entrant Employees shall:

- ❑ Attend the required training.
- ❑ Scrutinize the hazards in the work area, chemicals, procedures, etc. including information on the mode, signs, or symptoms and consequences of the exposure to hazards.
- ❑ Communicate with the Attendant to enable the Attendant to monitor entrant's status and alert entrants of the need to evacuate.
- ❑ Wear Personal Protective Equipment corresponding to hazards exposed.
- ❑ Avoid unsafe practices.
- ❑ Report unsafe conditions and practices of others to Supervisor or ESH&A and note on permit.
- ❑ Stop work if conditions are Immediately Dangerous to Life or Health (IDLH).
- ❑ Know the location of fire alarms and other emergency equipment.
- ❑ Evacuate the space whenever:
  - An order to evacuate is given by the attendant or ESH.
  - Any warning signs of symptoms or exposure to a dangerous situation;
  - The entrant detects a prohibited condition.

Authorized Attendant Responsibility shall:

- ❑ Attend the required training.
- ❑ Scrutinize the hazards in the work area, chemicals, procedures, etc. including information on the mode, signs, or symptoms and consequences of the exposure to hazards.
- ❑ Communicate with the Authorized Entrant to monitor entrant's status and alert entrants of the need to evacuate.
- ❑ Remain outside the excavation during entry operations until relieved by another attendant or operations are complete.
- ❑ Ensure Authorized Entrant(s) wear Personal Protective Equipment corresponding to hazards exposed and listed on the permit.
- ❑ Avoid unsafe practices.
- ❑ Report unsafe conditions and practices of others to Facilitator or ESH and note on permit.
- ❑ Monitor the activities inside and outside the space to determine if it is safe for entrants to remain in the space and orders the authorized entrants to evacuate immediately under any of the following conditions:
  - A prohibited condition is detected.
  - Behavioral effects of hazardous exposure is detected.
  - A situation outside the space that could endanger the entrant.
  - The attendant cannot safely perform all the duties required.
- ❑ Summon rescue and other emergency services immediately upon determining entrant may need assistance to escape the excavation.
- ❑ Perform no duties that might interfere with that attendants primary responsibility to protect the authorized entrant.
- ❑ Does not monitor multiple spaces.

Environment, Safety, Health & Assurance (ESH&A) shall:

- ❑ Conducting Excavation and Trenching Program Training.
- ❑ Calibrating monitoring equipment.
- ❑ Monitoring all excavation work being performed for the duration of the job.
- ❑ Ensuring the requirements of the Excavation Program are being met.

Contractors shall:

- ❑ All contractors must comply with their company excavation program if acceptable to ESH&A or they must follow the Ames Laboratory Program.
- ❑ Debrief with Ames Laboratory ESH&A at the conclusion of the excavation regarding any hazards confronted or created during operations.
- ❑ Comply with all inspections of the excavation site by ESH&A.
- ❑ Failure to comply with the Excavation Program may subject the contractor to disciplinary action.
- ❑ Contractors are prohibited from digging without an authorized Ames Laboratory employee present.

Appendix A

OSHA Guidelines for Proper Sloping & Benching

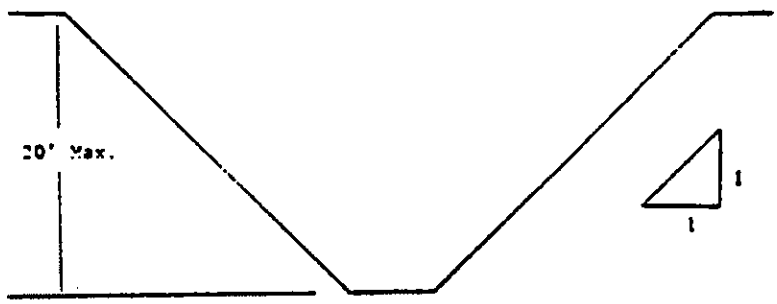

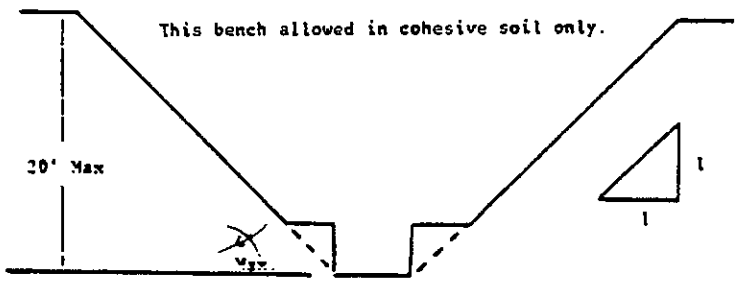

Appendix A

OSHA Guidelines For Proper Sloping & Benching

(Continued)

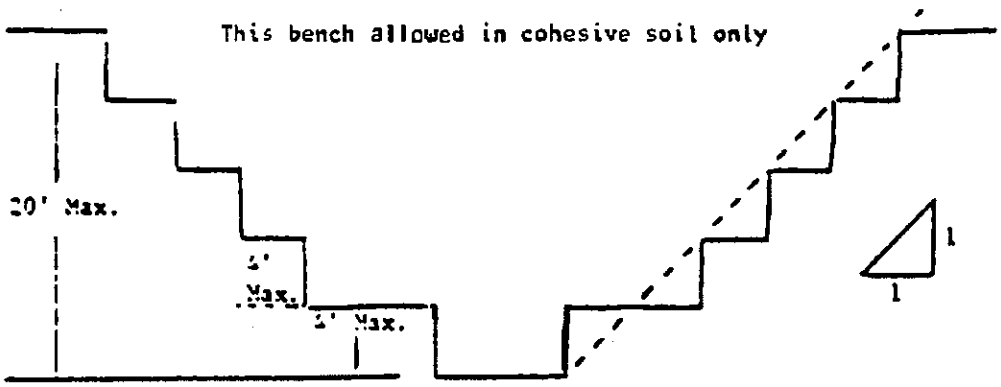

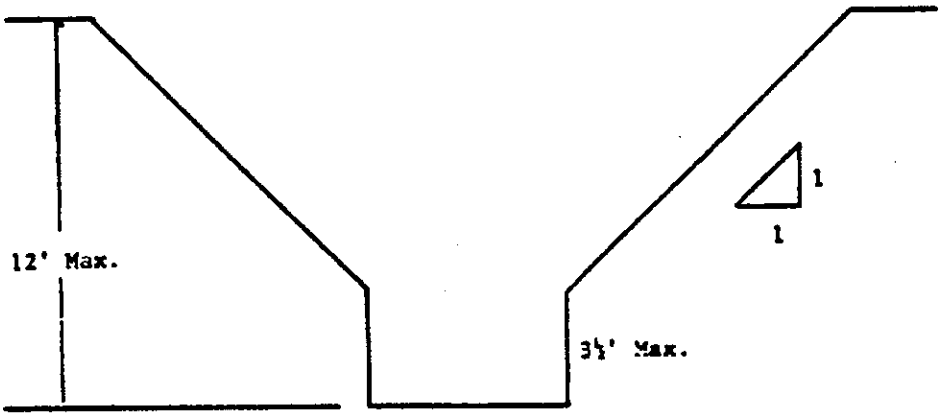
12' Max.
3½' Max.
1
1

Appendix B

OSHA Guidelines For Timber Sizing, Spacing and Installation

Table C-1.2

Timber Trench Shoring—Minimum Timber Requirements *

Soil Type B $P_a = 45 \times H + 72$ psf (2 ft Surcharge)

Depth of Trench (feet)	Size (Actual) and Spacing of Members **													
	Cross Braces							Wales		Uprights				
	Horiz. Spacing (feet)	Width of Trench (feet)					Vert. Spacing (feet)	Size (in)	Vert. Spacing (feet)	Maximum Allowable Horizontal Spacing (feet)				
		Up to 4	Up to 6	Up to 9	Up to 12	Up to 15				Close	2	3		
5 To 10	Up to 6	4×6	4×6	6×6	6×6	6×6	5	6×8	5			2×6		
	Up to 8	6×6	6×6	6×6	6×8	6×8	5	8×10	5			2×6		
	Up to 10	6×6	6×6	6×6	6×8	6×8	5	10×10	5			2×6		
	See Note 1													
10 To 15	Up to 6	6×6	6×6	6×6	6×8	6×8	5	8×8	5		2×6			
	Up to 8	6×8	6×8	6×8	8×8	8×8	5	10×10	5		2×6			
	Up to 10	8×8	8×8	8×8	8×8	8×10	5	10×12	5		2×6			
	See Note 1													
15 To 20	Up to 6	6×8	6×8	6×8	8×8	8×8	5	8×10	5	3×6				
	Up to 8	8×8	8×8	8×8	8×8	8×10	5	10×12	5	3×6				
	Up to 10	8×10	8×10	8×10	8×10	10×10	5	12×12	5	3×6				
	See Note 1													
Over 20	See Note 1													

* Mixed oak or equivalent with a bending strength not less than 850 psi.
** Manufactured members of equivalent strength may be substituted for wood.

Appendix B

OSHA Guidelines for Timber Sizing, Spacing and Installation

(Continued)

Table C-2.2

Timber Trench Shoring—Minimum Timber Requirements *

Soil Type B $P_a = 45 \times H + 72$ psf (2 ft Surcharge)

Depth of Trench (feet)	Size (S4S) and Spacing of Members **													
	Cross Braces							Wales		Uprights				
	Horiz. Spacing (feet)	Width of Trench (feet)					Vert. Spacing (feet)	Size (in)	Vert. Spacing (feet)	Maximum Allowable Horizontal Spacing (feet)				
		Up to 4	Up to 6	Up to 9	Up to 12	Up to 15				Close	2	3	4	6
5 To 10	Up to 6	4×6	4×6	4×6	6×6	6×6	5	6×8	5			3×12 4×8		4×12
	Up to 8	4×6	4×6	6×6	6×6	6×6	5	8×8	5		3×8		4×8	
	Up to 10	4×6	4×6	6×6	6×6	6×8	5	8×10	5			4×8		
	See Note 1													
10 To 15	Up to 6	6×6	6×6	6×6	6×8	6×8	5	8×8	5	3×6	4×10			
	Up to 8	6×8	6×8	6×8	8×8	8×8	5	10×10	5	3×6	4×10			
	Up to 10	6×8	6×8	8×8	8×8	8×8	5	10×12	5	3×6	4×10			
	See Note 1													
15 To 20	Up to 6	6×8	6×8	6×8	6×8	8×8	5	8×10	5	4×6				
	Up to 8	6×8	6×8	6×8	8×8	8×8	5	10×12	5	4×6				
	Up to 10	8×8	8×8	8×8	8×8	8×8	5	12×12	5	4×6				
	See Note 1													
Over 20	See Note 1													

* Douglas fir or equivalent with a bending strength not less than 1500 psi.
** Manufactured members of equivalent strength may be substituted for wood.

Appendix C

OSHA Guidelines for Combination Shoring and Sloping Configuration

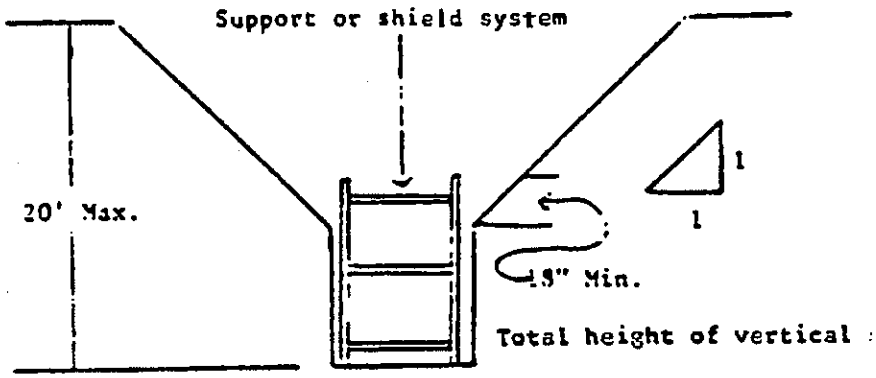

Appendix D

Schematic of Trench Jacks and Trench Shields

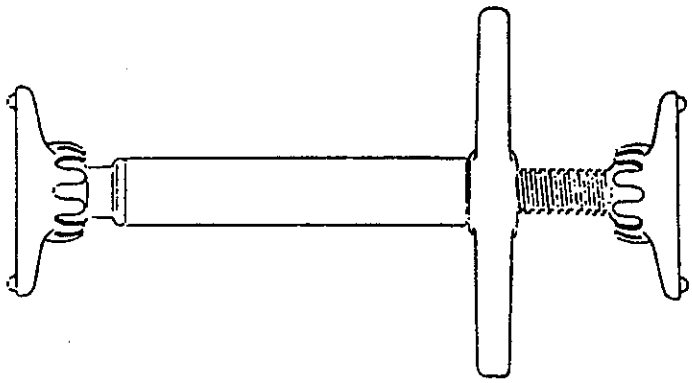

Figure 3. Trench Jacks (Screw Jacks)

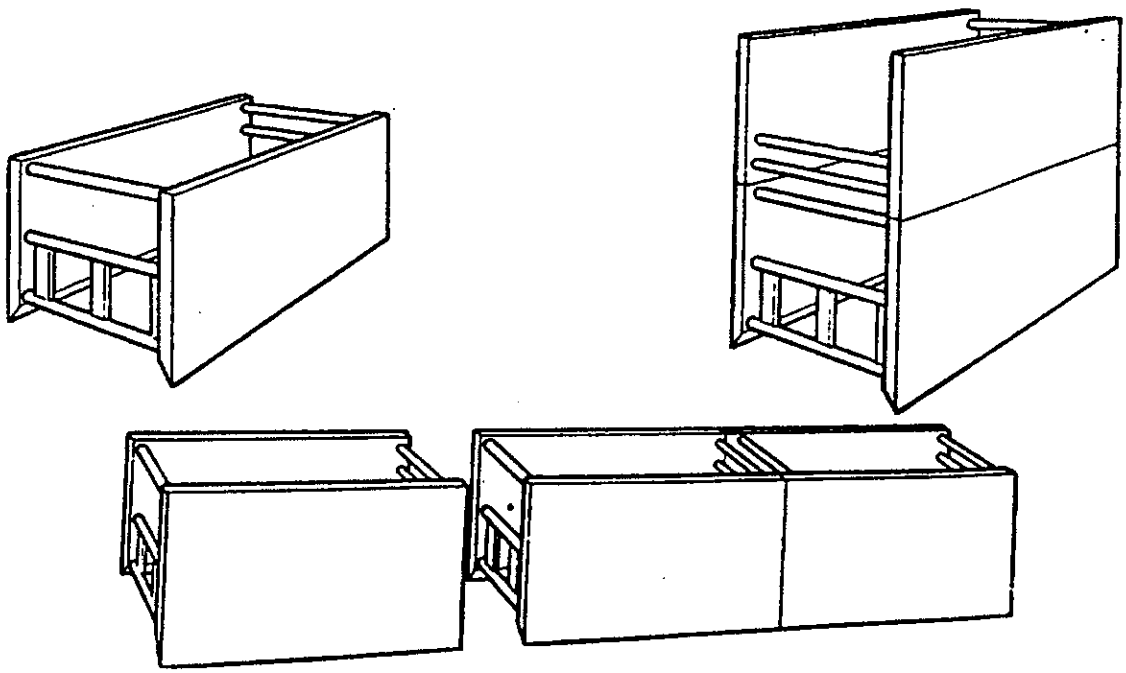

Figure 4. Trench Shields